The Wireless World
THE PRACTICAL RADIO JOURNAL
26th Year of Publication

No. 879. FRIDAY, JULY 3RD, 1936. VOL. XXXIX. No. 1.

Proprietors: ILIFFE & SONS LTD.

Editor:
HUGH S. POCOCK.

Editorial,
Advertising and Publishing Offices:
DORSET HOUSE, STAMFORD STREET,
LONDON, S.E.1.

Telephone: Waterloo 3333 (50 lines).
Telegrams: "Ethaworld, Sedist, London."

COVENTRY: Hertford Street.
Telegrams: "Autocar, Coventry." Telephone: 5210 Coventry.

BIRMINGHAM:
Guildhall Buildings, Navigation Street, 2.
Telegrams: "Autopress, Birmingham." Telephone: 2971 Midland (4 lines).

MANCHESTER: 260, Deansgate, 3.
Telegrams: "Iliffe, Manchester." Telephone: Blackfriars 4412 (4 lines).

GLASGOW: 26B, Renfield Street, C.2.
Telegrams: "Iliffe, Glasgow." Telephone: Central 4857.

PUBLISHED WEEKLY. ENTERED AS SECOND CLASS MATTER AT NEW YORK, N.Y.

Subscription Rates:
Home, £1 1s. 8d.; Canada, £1 1s. 8d.; other countries, £1 3s. 10d. per annum.

As many of the circuits and apparatus described in these pages are covered by patents, readers are advised, before making use of them, to satisfy themselves that they would not be infringing patents.

CONTENTS

	Page
Editorial Comment	1
Variable-Selectivity Developments	2
Rejuvenating Old Portables	5
Current Topics	7
The Circuit Diagram	8
Cossor "Straight" Three A.C. Set Reviewed	10
Listeners' Guide for the Week	12
Unbiased	14
New Apparatus Reviewed	15
High-pass and Low-pass Filters III	16
Readers' Problems	18
Ultra-Short-Wave Coils	19
Random Radiations	20
Broadcast Brevities	21
Principal Broadcasting Stations	22
Recent Inventions	24

EDITORIAL COMMENT

American Set Design

New Models Show Interesting Trends

A RECENT survey of new developments in American receiver design, prepared at our request by our American representative, reveals some interesting trends although comparatively little of outstanding novelty.

American designers are paying far more attention to frequency response, even with the cheaper sets, than has been the case hitherto, and quite a large number of new receivers boast of a response more or less flat up to 4,000 cycles per second. This is a very marked advance, since in the past the majority of popular receivers were content to include frequencies up to about 2,500.

It seems that the American public, being far less ready than our own listeners to be content with a powerful local station, resent the additional interference which comes in when the response of receivers is carried to a much higher figure. There is in America a definite demand for better bass reproduction, and this is probably a reaction from midget sets which were formerly so popular and where the bass register is so poorly reproduced. Bass compensation which could be operated manually has been popular for some time, and now a number of manufacturers are introducing bass compensation which is automatic.

Cabinet Resonances

The question of cabinet resonances is receiving more attention and is being tackled scientifically, some manufacturers, whose ideals in regard to quality are higher than the average, resorting to the introduction of a speaker mounted separately from the set. Other loud speaker manufacturers, instead of leaving their speakers to the tender mercies of the set manufacturer to mount them as he pleases, are adopting their own baffle construction suited to the speaker and employing acoustic filters.

Because of the objections to noise, tweeters and other additional speakers for high-note response are less in favour than formerly, whilst single speakers have improved in the reproduction of top.

More Valve Stages

There is a noticeable increase in the average number of valves in receivers. This is due partly to additional circuits for such purposes as automatic frequency control, volume expansion, and automatic selectivity control, the latter requiring the addition of five or six valves to the receiver. Another reason for the average increase in the number of valves is that designers are favouring the use of single-purpose valves, rather than multiple types.

A great deal of attention is being paid to tuning dials, and since nearly all receivers include short-wave ranges, all sorts of dial devices have been resorted to for indicating to which band a set is tuned. These requirements have resulted in a big increase in the general size of dials. One very large manufacturer has sponsored the idea of push-button operation with circuits tuned to a number of selected popular stations already tried out here but on a small production scale.

A very noticeable tendency which is rather difficult to account for is towards very generous output stages, especially in the more expensive designs. Outputs of from 10 to 35 watts for ordinary domestic receivers are now quite common.

Variable-Selectivity

I.—OBTAINING A FLAT-TOPPED RESONANCE CURVE

By W. T. COCKING

ALTHOUGH variable-selectivity can readily be achieved by the simple expedient of adopting a variable coupling between the coils of an IF transformer, careful attention to detail is necessary if satisfactory results are to be secured. It is shown in this article that the efficiency of the coils and the manner in which they are connected in circuit are all important

FROM the standpoint of the quality enthusiast one of the most important developments of recent years has been variable selectivity, for it permits one and the same receiver to be as good for local as for distant reception. Before its introduction, if a receiver were made highly selective in order to give interference-free reception of distant stations it was too selective for high-quality reproduction from the locals; if it were made unselective so that the full range of modulation frequencies was obtained, then it was of little use for distant reception on account of the interference experienced; if, as was usually the case, a compromise were adopted, the set could not be entirely satisfactory, for it could meet neither requirements fully. On the average, however, the results of such a compromise proved generally better than the adoption of either extreme.

The use of variable selectivity does not remove the necessity for a compromise between selectivity and quality, but it takes it out of the hands of the designer and puts it into those of the user. Even if this were all, it would be a distinct advantage, for everyone has a different idea about the optimum compromise. It is not all, however, for the optimum actually depends upon the strength of the

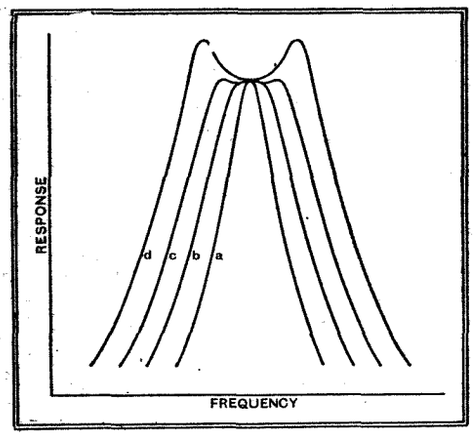

Fig. 1.—The effect of varying the coupling between a pair of tuned circuits is shown here. Curve (a) is for loose and (b) for optimum coupling, while curve (c) shows the flattish top produced by slight over-coupling. At (d) the double-humped curve obtained with tight coupling can be seen.

received station, the relative strength of its immediate neighbours in the frequency spectrum, and even the volume level at which the loud speaker is operated. The optimum compromise consequently varies from station to station, and it is only possible to obtain it under all circumstances if the receiver is fitted with variable selectivity. That these facts are generally realised is evidenced by the gradual inclusion of this refinement in receivers produced within the last year or so. *The Wireless World* 1936 Monodial AC Super[1] was among the first sets to have this fitting, and since then details have appeared of many other sets including it.

Resonance Curves

There are several different methods of obtaining variable selectivity, but only one which seems simple enough for general use. This method consists simply in varying mechanically the coupling between the pair of coils forming an IF transformer. It is an arrangement which seems simple enough, but in practice all sorts of unexpected difficulties crop up, and unless the transformers are correctly designed in the first place and used properly in the second, the results may not be very satisfactory.

When two tuned circuits are coupled together by mutual inductance between the coils the resonance curve exhibits a single fairly sharp peak at the resonance frequency when the coupling is sub-optimum. The curve still has only a single peak when the coupling is increased to the optimum value, but the peak is now much flatter. The difference is readily seen from the curves of Fig. 1, in which (a) and (b) refer to the sub-optimum and optimum conditions respectively. An increase in the coupling beyond the optimum value produces at first a curve with a top which is nearly flat (c) and later a double-humped curve (d) with two prominent peaks and a marked trough at the resonance frequency.

Now the maximum selectivity obtainable with such a pair of coupled circuits depends on the operating frequency, the $Q(=\omega L'/R)$ of the circuits and upon the degree of coupling. The selectivity increases with a decrease in frequency and coupling and with an increase in Q. The amplification obtained when the circuits are connected to a valve depends, apart from the characteristics of the valve, upon the coupling and upon the dynamic resistance of the circuits; it is greatest with optimum coupling and increases with an increase of the dynamic resistance. The greatest efficiency and selectivity will consequently be secured by using circuits of high Q and dynamic resistance and by operating them at a low frequency.

[1] *The Wireless World*, July 26th, and August 2nd, 1935.

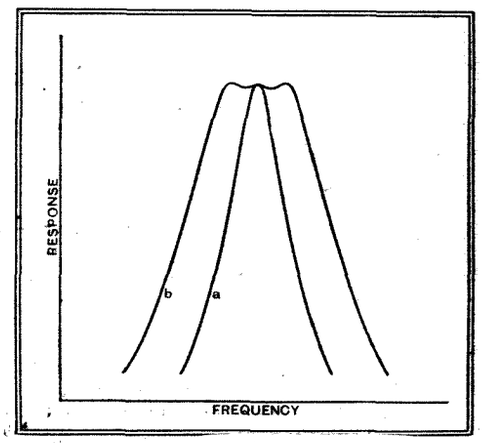

Fig. 2.—With three tuned circuits having adjustable coupling between two only, a single-peaked curve (a) is obtained with loose coupling, and a nearly flat-topped curve (b) with tighter coupling.

In the position of minimum selectivity it is desirable that the resonance curve should have a close approximation to a flat top over the whole range of modulation frequencies. The curve should not have two prominent peaks, for these will not only tend to accentuate the higher audible frequencies but may lead to amplitude distortion in the detector. It is not difficult to show that the required condition can only be realised for the audible range of frequencies by using circuits having a low value of L/R, which means a low Q at a low frequency or a high Q at a high frequency.

Whatever operating frequency be used, it is found that if Q is chosen to give the same flatness of top to the resonance curve over the normal sideband range of frequencies in the "low-selectivity" position of the control, the selectivity is the same at "high-selectivity." The necessity for maintaining a flat top to the resonance curve and avoiding marked peaks sets a limit to the selectivity obtainable with loose coupling and prevents the operating frequency from having any effect upon the selectivity. There is consequently no

Developments

advantage in using a low frequency. The Q required for given results will depend on the frequency, and, in general, it is not possible to build coils of high enough Q for the best results at very high frequencies, while it is very easy to do so at low frequencies. In general, a high intermediate frequency is advantageous in a superheterodyne, but the frequency cannot normally lie within the tuning range of the receiver. We are consequently limited to frequencies lower than 150 kc/s, between 350 kc/s and 550 kc/s, and higher than 1,500 kc/s. It is very difficult to secure a high enough Q at frequencies higher than 1,500 kc/s, but it is readily possible to do so between 350 and 550 kc/s. The commonly used frequency of 465 kc/s is thus quite suitable, and we need not further consider the operating frequency.

Three-circuit Couplings

Even at this frequency the Q must be of quite a moderate value if the flat top of the resonance curve is to have a maximum width of 20 kc/s. Consequently, only moderate selectivity is obtainable when the coupling is loosened, and for good results many pairs of coupled circuits would be needed. There is no electrical objection to this, of course, but it is by no means economical.

Much more satisfactory results can be secured by using not two circuits, but three.[2] If a pair of variably coupled circuits be used and followed by a third circuit of one-half the Q, the single-peaked response curve of the single circuit tends to fill up the trough in the curve for the coupled pair. By correct design it is possible to obtain with three circuits a curve like (a) of Fig. 2 at "high selectivity" and one similar to (b) at "low selectivity." The curve exhibits three peaks of equal height, and there are two troughs between them. The greater the band-width and the higher the Q, the greater will be the difference between the heights of the peaks and troughs, so that for an even response there is a limit to the Q. If we permit 1 db. variation between the peaks and troughs and make the width of the curve such that the response at 10,000 c/s different from resonance is 1db. below that at resonance, the Q of the two variably coupled circuits must be 93.5 and that of the third circuit one-half this figure. With three circuits capable of passing modulation frequencies up to 10,000 c/s, the response will then vary not more than ± 0.5 db. up to this frequency.

At 465 kc/s it is by no means difficult to build coils of this value of Q. It is, in fact, quite possible to obtain circuits of much higher Q. A Q of 93.5 at this frequency can be called moderate, and is quite readily obtainable without undue precautions; it does, however, necessitate the use of Litz wire, and, if the coils are of high inductance, air-dielectric trimmers. It may be obtained with either air- or iron-cored coils, so that which are used will depend upon the manufacturer's preference and will not affect the electrical performance.

For the most satisfactory performance, therefore, the tuned circuits should be arranged in threes, which means that the number included in a receiver should be three, six or nine, according to the degree of maximum selectivity required. In every three circuits the coupling between two only need be variable, so that the arrangement leads to no special complication. There are many possible ways of arranging the circuits in a receiver, and some appear no different from conventional methods. Before discussing this, however, let us consider the question of amplification.

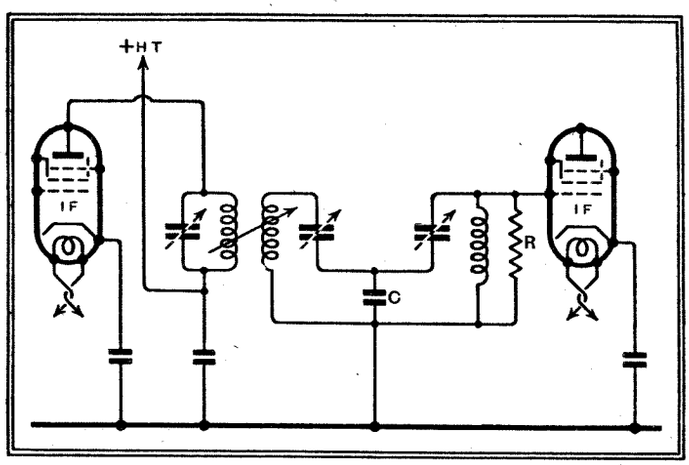

Fig. 3.—One method of connecting three circuits for variable selectivity. If all three circuits are alike, R must be equal to the dynamic resistance.

When the Q of the tuned circuits and their coupling have been settled on considerations of the selectivity and band-width required, the amplification depends only on the characteristics of the valve and the dynamic resistance of the tuned circuits. Now, the dynamic resistance is $\omega^2L^2/R = \omega LQ$, so that at a given frequency it is proportional to the inductance when Q is fixed. The inductance which can be used is limited primarily by the stray circuit capacities, and cannot normally be higher than some 2,000 μH.; in practice, however, the possibility of obtaining the requisite Q must also be considered, and a reasonable figure is then an inductance of about 1,500 μH. With this inductance and a Q of 93.5 a dynamic resistance of 0.41 megohm is secured at 465 kc/s.

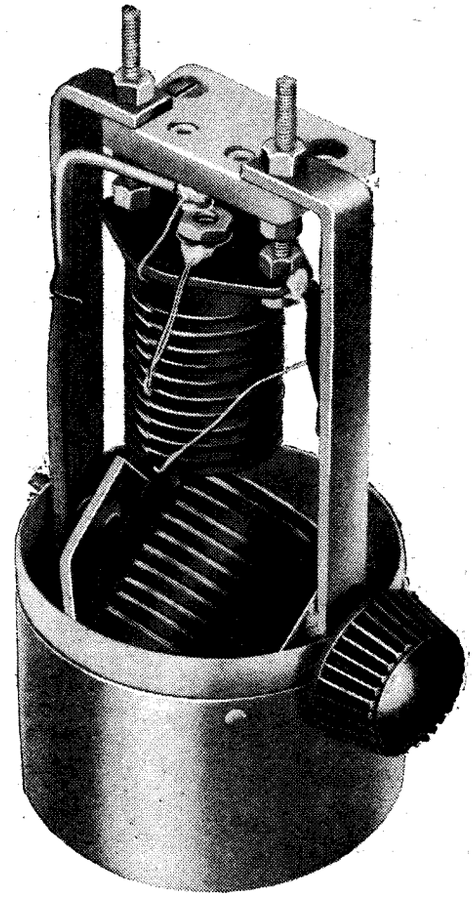

A typical variable-selectivity IF transformer of the kind having a rotatable lower coil.

Amplification

With a valve of suitably high internal resistance and a normal figure for mutual conductance, stage gains of 800 times could be secured with a single tuned circuit, or about 400 times with a coupled pair. Amplification of this order is actually obtainable from a single stage when the grid circuit is untuned, but considerations of stability prevent it from being a practical proposition in a receiver.

In order to maintain stability and for other reasons to be discussed later, we must be content with a lower degree of amplification. At first it would consequently appear that there is no justification for the use of circuits of high dynamic resistance, and that we should employ a lower value of inductance so that the dynamic resistance is the right value for the amplification which we can use. This

[2] *The Wireless Engineer*, March, April, May, 1936.

Variable-Selectivity Developments—

is not so, however, for the stage gain is proportional to both mutual conductance and dynamic resistance. Consequently, we can control it by varying either.

It is much easier to vary mutual conductance than dynamic resistance, for it may be done merely by selecting the grid bias of the valve appropriately, whereas to change the dynamic resistance of a circuit without affecting its Q means a complete redesign of the IF transformer. By employing the highest practicable value of dynamic resistance, therefore, the application of the transformer is greatly widened, and it becomes suitable for very varied conditions.

Turning now to the uses of the circuits, there are many possibilities. The circuits must be in threes, but they need not all be together. Fig. 3 illustrates one method of connecting three circuits between a pair of valves; the first pair are variably coupled and contained in one screening can, while the third circuit, which must be separately screened, is coupled to the second by the "bottom-end" capacity C. If this third circuit is built to have the same Q as the others, as will usually be the case for convenience, it must be damped by an external resistance R equal in value to the dynamic resistance.

In general, however, two IF stages with six tuned circuits are used, and it is then possible to adopt a more conventional arrangement, for one variably coupled pair can be used between the frequency-changer and the first IF valve, another between the two IF valves, and a fixed-coupled pair of Q/2 between the second IF valve and the detector, as shown in Fig. 4. This appears a very ordinary arrangement, and so the circuit actually is; provided that the transformers are correctly designed and used, however, it will give the three-humped curve of Fig. 2. If the coils in T3 have, when connected in circuit, one-half the Q of those used in T1 and T2, and if they are quite loosely coupled, they may be regarded as approximately the equivalent of two single circuits, so that in effect each variably coupled pair has a single circuit associated with it.

The Coupling to the Detector

In considering the design of this transformer T3 the input resistance of the detector must be taken into account; furthermore, the gain from the grid of the last IF valve to the detector must be as high as possible in order to reduce to a minimum the risk of amplitude distortion in this stage. These conditions are best met by making the coils in this transformer of the same Q as those in the others, and arranging the external circuits to provide the requisite damping to reduce it to one-half. In the case of the detector, the input resistance is commonly about 0.125 megohm, and there are two ways of making this value of resistance reduce the Q of the secondary of T3 appropriately. If this coil is the same as the other it has a dynamic resistance of 0.41 megohm, so that we can obtain the correct conditions by tapping the coil for the connection to the diode anode so that the diode is fed through a step-down ratio of 1.81-1. Alternatively, we can use a lower inductance coil for the secondary so that the dynamic resistance has the same value as the detector input resistance—0.125 megohm.

As regards amplification, selectivity and band-width, there is no difference between the two alternatives, but there is one reason why it is better not to use the tapped coil. This reason is that in the detector circuit there are necessarily harmonics of the intermediate frequency, and at these harmonic frequencies the impedance between the two terminals of the transformer is higher in the case of the tapped coil than it is with the untapped arrangement. There is consequently less chance of feed-back to earlier circuits with the latter, and a reduced possibility of certain types of superheterodyne whistles being produced. In order to match the detector input resistance, the secondary inductance of T3 should be less than that of the other coils, and to suit the average case an inductance of 457 μH. is called for.

Now let us consider the primary; the highest gain will be obtained by choosing the highest inductance, so that we can make this coil the same as those in other transformers, 1,500 μH. It must, of course, be shunted by a resistance of 0.41 megohm in order to reduce the Q to one-half its normal figure. This is most conveniently done by so choosing the second IF valve and its operating conditions that it has an anode AC resistance of 0.41 megohm. The VMP4G, with 250 volts anode, 100 volts screen-grid, and −2.1 volts grid, potentials, has this value of resistance, with a mutual conductance of 2.65 mA/V. With a suitable degree of coupling between the coils of T3 a gain of 120 times can be obtained from this stage.

The AVC System

It should be noted that it is not permissible to control the last IF stage from the AVC system, for a change in the grid bias will alter the AC resistance of the valve and so upset the frequency characteristic of the band-pass filters. Furthermore, for the same reason it is not permissible to feed a delayed diode AVC circuit from the primary of T3; the input resistance of such a circuit varies with the signal amplitude, and so cannot be taken into account when choosing the damping on T3. These conditions are not very onerous, however, for it is not usually possible to control the last IF valve if amplitude distortion is to be avoided, and delayed diode AVC itself is likely to cause such distortion.

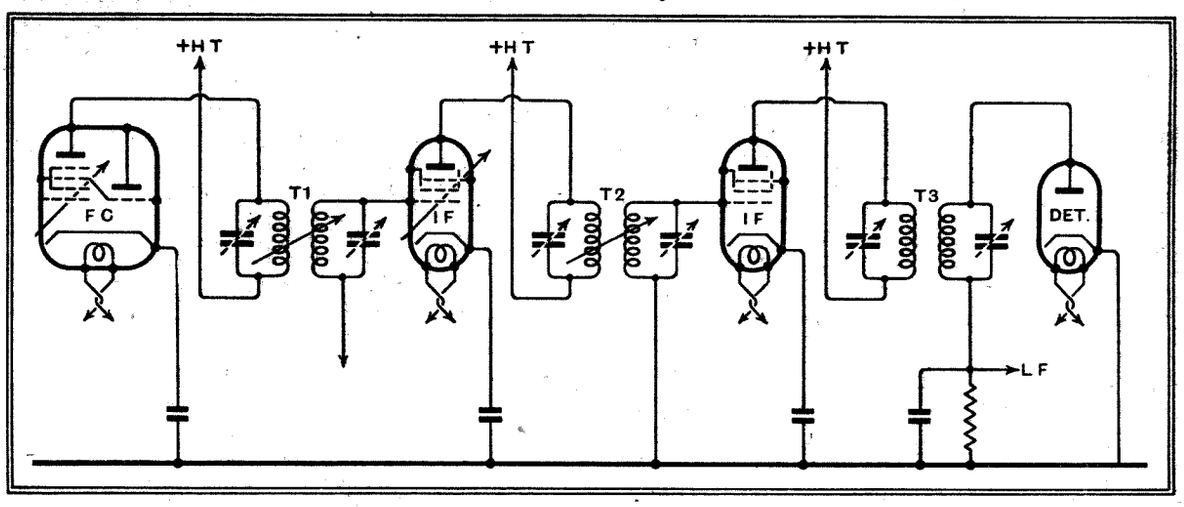

Fig. 4.—The correct performance can be secured with a conventional layout by adopting the arrangement shown here. The transformer T3 must be correctly designed to have coils of Q/2 when damped by the valve and the detector.

(To be continued.)

NOISE WITHOUT AN AERIAL

The Unavoidable Background

A HIGHLY sensitive set, when working "all out," is bound to produce a certain amount of background noise, even when the aerial is disconnected. Under these conditions the noise is due to thermal agitation in the input circuit and to normal valve hiss, both of which are largely unavoidable.

Sometimes it is found that a multi-stage superheterodyne is "quite noisy" with the volume control at maximum but without an aerial. It would not be possible to be definite in saying whether the background noises are excessive or not. Failing laboratory measurements, the best test is that of actual reception; provided a number of transmissions of good programme value can be received with a silent background when the de-sensitising effect of AVC comes in operation, it is probable that everything is well.

Rejuvenating Old Portables

EASY-TO-APPLY IMPROVEMENTS TO BOTH HF AND LF SECTIONS

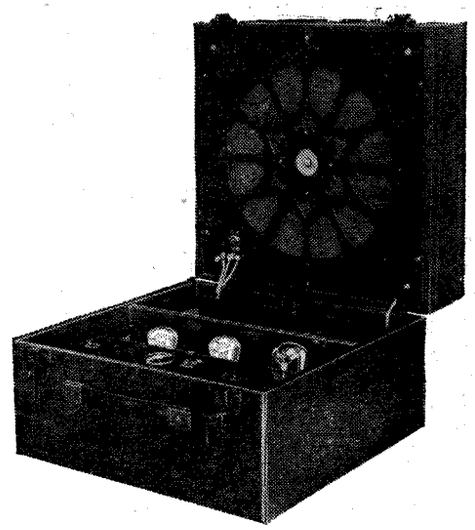

THIS article suggests an interesting practical application of the "double triode" method of HF amplification, which offers a simple and inexpensive solution of the problem of how to improve the HF amplifier of an out-of-date portable

SUMMER is here—at any rate at the time of writing—and with it comes the need for some form of portable set to be taken on the various expeditions we are so busily planning. Some readers, perhaps, have portables no longer in their first youth, but which, if overhauled and slightly altered, would prove excellent companions.

Many of these sets are of the five-valve type that was so common a few years ago. The circuit used was almost standard and is given in Fig. 1. The principal weakness of this circuit lies in the HF stages, which are aperiodic and provide little, if any, amplification. The obvious way of improving a set of this type is to replace the two HF valves by one screen grid valve, giving the circuit shown in Fig. 2. Reaction may be applied either to the frame aerial or to the second tuned circuit, as is most convenient. The change is quite straightforward, the additional components needed, apart from the valve, being a dual-wave coil, a second tuning condenser, a small fixed condenser and possibly an on-off switch. This will be needed if all the contacts on the present wave change switch are full. It is used to control the LT supply, thus releasing contacts on the original switch for wave-changing on the coil.

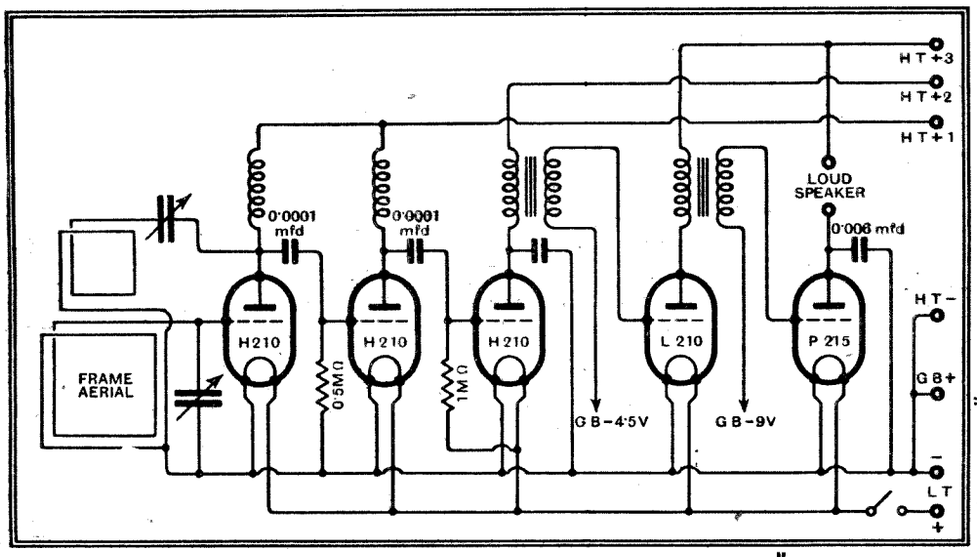

(Above) Fig. 1.—A typical 5-valve "portable" circuit of a few years ago with a 2-stage aperiodic amplifier—amplifier by courtesy only, as a rule.

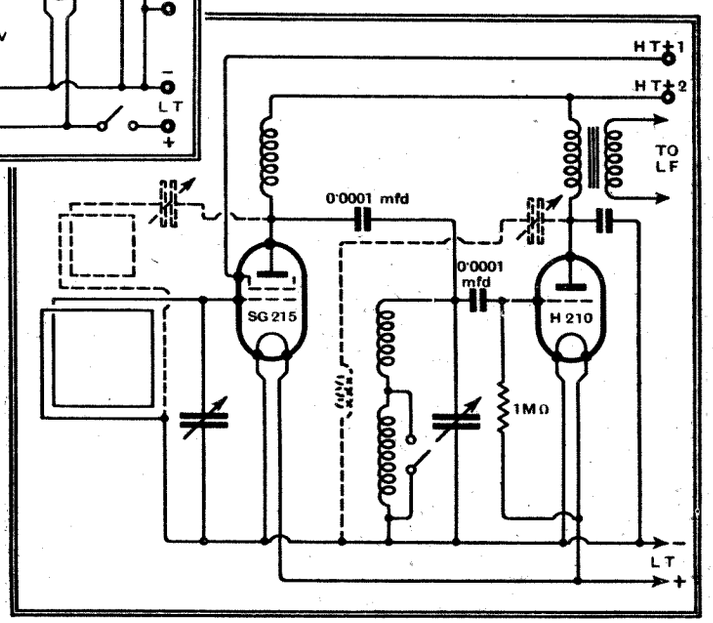

(Right) Fig. 2.—The most obvious method of improving the HF amplifier is by fitting an SG valve.

An even cheaper method is to use the triode HF circuit described by F. M. Colebrook in *The Wireless World* of January 18th, 1935. Here no additional valves are required as the H210 type works almost as well as the L210 suggested in the article referred to. The circuit is given in Fig. 3, and it will be seen that the first HF choke is replaced by a resistance, the values of the coupling condenser and resistance before the next valve altered somewhat and a second tuned circuit added before the detector. A bias of $1\frac{1}{2}$ volts is applied to both the valves. As before, reaction can be used on either circuit, or even on both, if ease of control is not an important factor.

Experiments carried out on a set modified in this way indicate that the two triodes together give approximately the same gain as a single SG stage. In South London, Droitwich was so strong that the set had to be mistuned considerably to reduce the volume to a comfortable level. Luxembourg, Radio Paris and Fécamp could all be received at reasonable strength during daylight, while at night, of course, the range would be considerably greater.

Certain precautions must be taken when carrying out either of these changes. The coil must be screened and the screen, of course, must be earthed. A certain amount of screening round the second condenser is also desirable. If a two-

Rejuvenating Old Portables—

gang condenser is used, a large trimmer must be mounted on the panel to compensate for the mismatching of the frame aerial and the coil. Probably the best arrangement is to use two condensers mounted on concentric spindles and a double knob, as on the older Beethoven portables, but these are not very easy to get. With this arrangement an earthed plate should be interposed between the two condensers to provide some screening, and so avoid unwanted coupling.

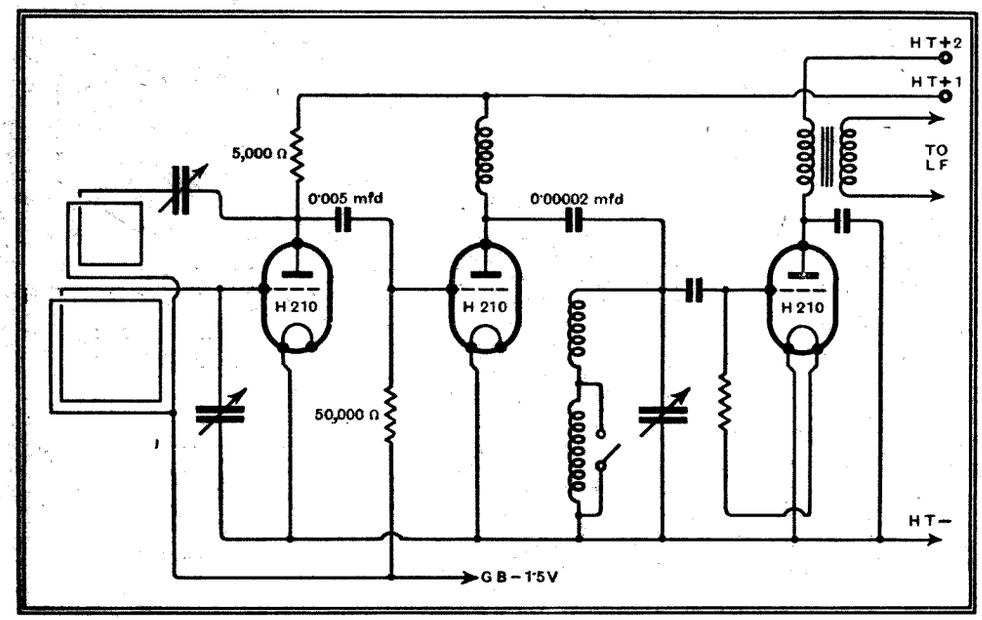

Fig. 3.—The original valves may be retained if the Colebrook method of HF amplification is used.

LF Amplifier

On the LF side of either four- or five-valve portables of out-of-date type two alternative improvements are also possible. The anode currents of the two LF valves will be about 10 mA, while the maximum undistorted output will not be greater than 150 milliwatts. If both of these valves are removed and replaced by a small pentode of the Pen 220 type, the anode current will be reduced to about 5 mA, and the output will, if anything, be increased. The change is very simply effected by removing the second transformer and connecting the grid lead of the first to the grid terminal of the output valve holder. The screen of the pentode must be connected to HT+, as shown in the circuit given in Fig. 4.

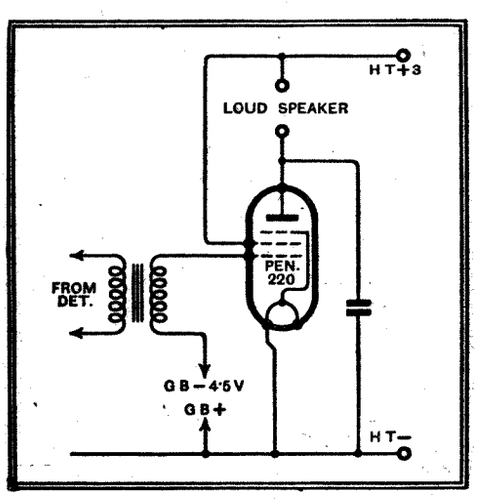

Fig. 4.—Fitting a pentode in place of the original 2-stage LF amplifier.

Alternatively, if the first LF valve is kept in and a Pen 220 A used in the output stage as shown in Fig. 5, the anode current will not be greatly increased, but the power output will now be sufficient to drive a small moving-coil loud speaker, with a resulting improvement in quality of reproduction. To avoid box resonance, a hole should be cut out behind the speaker; this will also enable a set of the suitcase type to be used when closed. A sensitive speaker with a permanent magnet of nickel-aluminium alloy such as the Stentorian Midget should be chosen and mounted on a baffle behind the original loud speaker fret.

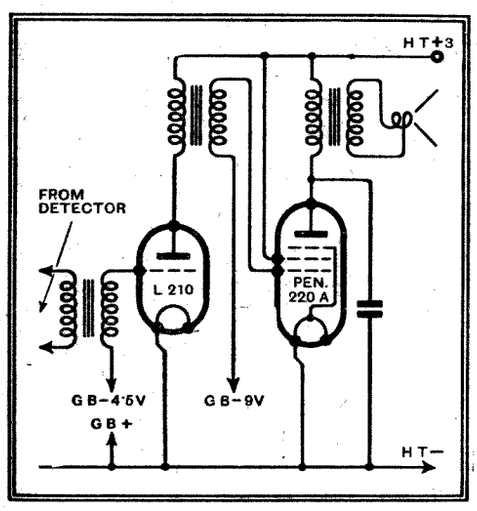

Fig. 5.—The fitting of a pentode of higher power may involve the retention of the existing intermediate LF stage.

DISTANT RECEPTION NOTES

I WONDER if you have noticed how often the Palermo transmissions force their way through those of Athlone? Athlone's power is 60 kilowatts, whilst that of Palermo is officially given as 4. One would have thought that the Irish station would be strong enough to drown the Italian in this country, but certainly it does not. Under the Lucerne Plan both stations use the same wavelength of 531 metres; but I have found of late that Palermo is given to working just a little below Athlone. And I rather fancy that those 4 kilowatts have in practice undergone a certain amount of multiplication!

Speaking of Italian stations reminds me that the Bologna station has just been officially opened with an output of 50 kilowatts. It has been named after Marchese Marconi, and it works on a wavelength of 245.4 metres. As it occupies the channel next door to that of the very strongly received Lille P.T.T. station it is not too easy to pick up unless the set is very selective.

A week or two ago I referred to the unwelcome increase of spark interference near the top of the medium-wave band. This continues, I am sorry to say, and at times the same sort of interference is noticeable also near the middle of the band and between 200 and 250 metres. As my abode is just about as far inland as any place in England can be, I am afraid that dwellers near certain parts of the coast must suffer a good deal. I hope that the question of spark interference with medium-wave broadcasting will be one of the matters discussed at the U.I.R. summer meeting which is now being held at Lausanne.

Unless you live very close to the Scottish National, I expect that you have been hearing Rennes-Bretagne pretty well on 288.5 metres for some little time. The new transmitter is now conducting tests outside programme hours with much greater power.

A question that often comes my way is: What stations can be relied upon when one is calibrating a receiving set? It is a very pertinent question, for there are still numbers which wobble night by night many kilocycles this side or that of their allotted frequencies. However, there are luckily sufficient reliable "landmarks" to enable one to work out a calibration chart with accuracy between 531 and 203.5 metres, which covers the greater part of the medium-wave band. B.B.C. stations may be taken for granted. This gives us eleven plottings between 449.1 and 203.5 metres. Unfortunately for the calibrator (though fortunately for the mere listener), the spread of many of these stations is too great for accurate plottings to be made unless a sensitive visual tuning indicator is in use. Of course, such an indicator always *should* be employed, for you can't hope for precise calibration without it; but there are many who want to make reasonably accurate calibration charts without the use of the VTI. To them I can recommend any of the main German stations from Königsberg on 291 metres upwards as well as the German common wavebands on 251 metres and 225.6 metres. At the top of the band Athlone is reliable, and the Swedish stations from Hörby on 265.3 metres upwards can usually be depended upon to keep to their proper wavelengths.

D. EXER.

CURRENT TOPICS

EVENTS OF THE WEEK IN BRIEF REVIEW

Finnish Licences

THE number of licence holders in Finland has increased from a little over 129,000 to nearly 145,000 during the past year. It is expected that after the completion of the new high-powered Lahti transmitter, and the opening of the new stations at Uleaborg and Vasa, a great increase in the number of listeners will take place.

The Holy See

IT is reported by a European News Agency that a plan is afoot in Vatican City to establish a television transmitter at the Holy See. It is even said that the Pope has himself interviewed the Marchese Marconi about the matter, but at present confirmation is lacking.

Norwegian Volksempfänger

THE Norwegian Government is putting forth a great effort to make everybody in the country a keen listener, and it is stated that a large sum of money has been voted to support the production of "Peoples' Receivers." The Government is now being urged to amend the legislation in Norway so as to relieve all manufacturers of these receivers of any financial obligation to inventors whose patents they may use in the construction of the set. A great proportion of these patent holders are valve-manufacturing firms who are already carrying on a campaign in Denmark against set makers who produce receivers without paying the necessary royalties. Probably the patent holders in the various Scandinavian countries will eventually adopt a common front to protect their rights.

Loud Speakers to Replace the School Bell

THE ubiquitous loud speaker seems to be carrying all before it in the matter of ousting time-honoured methods of making a noise. In many cases it has already been used to replace Church bells, the actual source of the sound being a gramophone record. The school bell is the latest institution to be threatened by the loud speaker, as in certain countries in Central Europe this instrument is to be used for summoning the children to school. A psychological experiment is to be tried by using music of a joyous and inviting character to replace the doleful clanging of the bell. Lively music is also to be broadcast via this outside loud speaker during the various intervals between the lessons when the children are in the playground. Later it is hoped to provide a quiet background of music from indoor loud speakers while lessons are actually being given. At present, however, it has not been decided what type of music can be considered as being readily suitable.

French Announcers *Are* Difficult to Follow

MANY people in this country nowadays use the news bulletins from the French broadcasting stations as a means of learning French or of improving their knowledge of it. Frequent complaints have, however, been made by these seekers after knowledge that the speed at which the announcers speak is too great. Others have suggested, however, that this rapidity of speech is really a delusion brought about by their lack of adeptness. It would appear, however, that there is considerable justification for the complaint, as French people themselves are protesting against the way in which the announcers gabble off the news bulletins. This more particularly applies to the racing results, which are said to be more like the race of the results than the result of the races.

Electioneering Tactics in the U.S.A.

ALTHOUGH it is still several months ahead, the two great political parties in the United States are already busy with their campaigns for the presidential election in November. Needless to say, broadcasting is taking a very prominent part, and heavy bookings are said to have been made by party agents for time on the air. It is stated that special precautions are being taken to prevent etheric disturbances being created by the opposition when a speaker is at the microphone. At the last election certain speeches were completely blanketed out by interference caused by unknown portable transmitters. Such interruptions were, however, in most cases the work of irresponsible local "agents," and since such conduct is prejudicial to the interests of both parties it is said that they have banded together to put down such coarse tactics. There are, after all, far subtler ways of interfering with an opposition broadcast speaker than by the creation of ordinary interference. The simple and direct methods of campaigning adopted at Eatanswill are things of the past.

Andorra Calling

THE fact that a country is small does not necessarily mean that its requirements in the matter of radio power will be small when it does establish a broadcast service, for its transmitter may be designed for other purposes than that of serving the natives. In the latter connection, of course, one naturally thinks of the famous transmitter in the small independent country of Luxembourg. It appears that the people of Andorra have been bearing Luxembourg in mind when turning over in their minds the problem of making their voices heard in Europe, and it is rumoured in Paris that a station is being planned having a power altogether out of proportion to the dimensions of the country—a real ether shaker, in fact. Certain French interests are rather disturbed over the matter, for, although one would think that this tiny republic, perched in the Pyrenees, would be influenced either by French or Spanish culture, it is said that German influence is very strong in the country.

Slot-meters, well known in connection with gas and electric supplies, have, in Switzerland, appeared on radio sets. The appropriate use of a mirror by the photographer gives us both front and back views of a receiver so fitted.

The Future of British Broadcasting

The Government's Proposals

IN the form of a Memorandum by the Postmaster-General,[1] the Government's proposals with regard to the recommendations of the Ullswater Committee were issued on Monday.

The majority of recommendations were adopted in their entirety or with slight reservations, and the Government accept the recommendation that the B.B.C. charter should be extended for ten years from December 31st, 1936. Among other recommendations accepted is that the proportion of licence revenue to be paid to the B.B.C. should be increased, the initial assignment to be 75 per cent. of the net licence revenue, with a proviso that, if made necessary by expenditure on television and Empire Broadcasting, it should be open to the Treasury to approve an appropriate increase. The Empire broadcasting service is to be expressly authorised and developed, while sponsored programmes as well as direct advertisements should be excluded. If necessary, further powers should be sought for reducing the electrical interference nuisance.

The Government does not accept the recommendation that responsibility for the cultural side of broadcasting should be transferred to a Cabinet Minister free from heavy departmental responsibilities, and proposes the continuance as at present of the existing functions of the P.M.G.

The Corporation should refrain, as in the past, from broadcasting its own opinion by way of editorial comment, and the Government now proposes to apply this restriction to the B.B.C. publications as well.

Licences for relay stations are to be subjected to certain additional provisions, and are liable to be terminated on December 31st, 1939.

Agreement is expressed with the Committee's view that all steps should be taken to prevent broadcasting from foreign stations of advertising programmes intended for this country.

With regard to the recommendations of the Committee which affect action to be taken by the B.B.C., the constitution of Wales as a distinct broadcasting region is foreshadowed; and, with regard to the private lives of the Corporation's staff, it is considered that the general practice of the Civil Service should be followed; in this the B.B.C. concurs.

Perhaps the spirit of the Memorandum is best summed up by express Government concurrence with the finding of the Committee: "Constitutional independence of the B.B.C. brings advantages which could not otherwise be secured."

[1] Broadcasting: Memorandum by the Postmaster-General on the Report of the Broadcasting Committee, 1935. H.M. Stationery Office, 2d.

The Circuit Diagram

AN INDISPENSABLE PRACTICAL HELP, AND A SYMBOLIC AID TO THOUGHT

By "CATHODE RAY"

IT is easier to identify prominent politicians in the cartoons than on the news photo pages of our daily papers. It may be said, in fact, that the grossly distorted versions of these gentlemen presented by the caricaturist are more like them than they themselves. The distinguishing features are picked out and reduced to conventional forms that can be recognised at a glance.

When wishing to trace out the best route between two points in a city one does not ask for photographs of the streets; even those taken from an aeroplane. However exactly they may represent the actual thing, it is far more clear and instructive to refer to a map, in which true resemblance has been deliberately avoided.

A photograph, or even direct inspection, of a complicated machine shows just a maze of wheels and levers, from which an experienced engineer might derive little information. But a blue print, having little relation to the original in appearance, would enable him, if necessary, to reproduce such a machine.

So now there is no need to argue why circuit diagrams are more useful than pictures of sets.

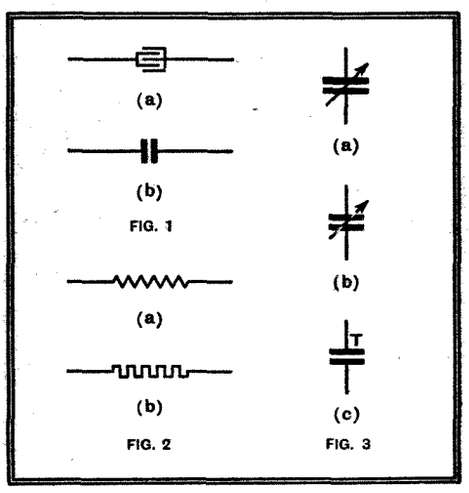

Fig. 1.—The symbol (*a*) for a fixed condenser, though generally superseded by (*b*), is occasionally still used to denote a condenser of large capacity. Fig. 2.—On the Continent (*a*) is used to indicate an inductance and (*b*) a resistance. Fig. 3.—To distinguish pre-set or trimmer condensers from the tuning condenser (*a*), symbols (*b*) or (*c*) are sometimes used.

A circuit diagram is really a remarkably clever and useful dodge. It is a dodge, as I shall seek to show later.

It is clever because it is simple and saves so much time both for the drawer and the reader. Whoever worked out the symbols in the first place hit on forms that, on the whole, are quick and easy to draw, and which suggest the functions (rather than the diverse and evolutionary physical shapes) of the circuit elements. There has been some improvement on the originals, as may be seen from Fig. 1. And there is, alas, some lack of international standardisation, as exemplified in Fig. 2. In this country (*a*) represents resistance, but in some places abroad it stands for inductance. So the latter people have to adopt another symbol (*b*) for resistance, and anybody who has tried to draw a diagram containing a lot of resistances, in a hurry, has little desire to follow their example. Our curlywiggle, on the contrary, is, if anything, an easier symbol for inductance than (*a*), and is more suggestive.

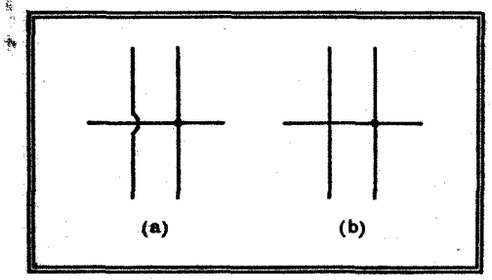

Fig. 4.—Non-connected and connected wires are generally shown in British diagrams as at (*a*), but the American method (*b*) is sometimes seen.

But I always think a battery symbol is wrong. There seems no reason why a short thick stroke should not be quite as suitable for representing a positive pole as a negative, and it would agree better with the almost universal construction of actual cells.

The arrow for variability is very clever. More recently a need has arisen for distinguishing variables that are accessible controls, such as tuning condensers, from those that are more or less permanently set when the receiver is being finally tested, such as trimmers and padding condensers. *The Wireless World* has quietly adopted a symbol that distinguishes these (Fig. 3 (*b*)), but the method is not easily adaptable to hand-sketched diagrams, and no alternative seems to have been brought into general use. I personally have used the symbol (Fig. 3 (*c*)), the T representing either an adjustment screw or the word "trimmer," according to one's fancy.

Another alternative practice is in the drawing of crossed wires. Fig. 4 (*a*) depicts the method generally used in Britain for showing non-connecting and connecting wires, and it seems to me to offer rather

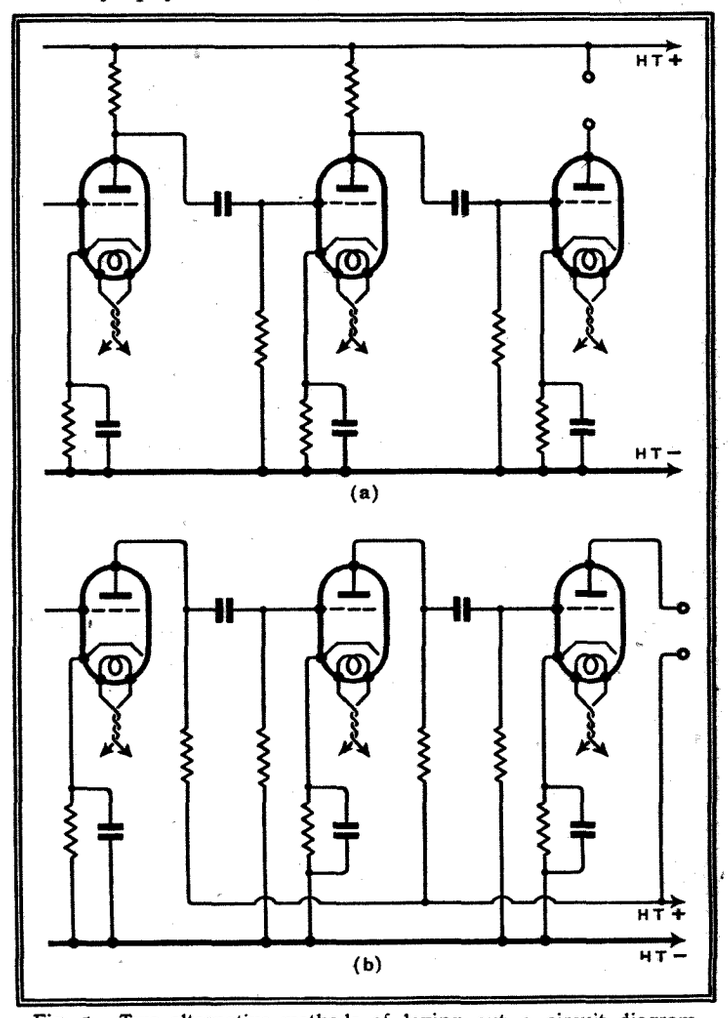

Fig. 5.—Two alternative methods of laying out a circuit diagram, differing in the positions of the +HT feeder. A neater result is given by (*b*), but (*a*) distinguishes the high- and low-voltage leads.

The Circuit Diagram—

less possibility of error than the American equivalent (*b*).

On the whole, though, these electrical hieroglyphics have gained a world-wide acceptance that the symbols of speech have never achieved. And the same is even more true of their assembly into diagrams and language respectively. An English engineer may have less difficulty in reading a Japanese circuit diagram than he has in reading a compatriot's handwriting. Mind you, it is a great mistake to suppose that a circuit diagram is merely a collection of the appropriate symbols joined up correctly. If everybody had not agreed to lay out the circuit diagram of a radio receiver according to certain conventions, the reading of them would be intolerably tedious. Advantage was taken of this a number of years ago by certain "designers," who thus gained a quick reputation by "scrambling" perfectly familiar standard circuits. It is rather an amusing parlour game to try this on the local expert and time him at sorting them out.

Circuit Conventions

Among the generally observed customs are the placing of the aerial at the extreme left, with the successive stages arranged horizontally towards the right, and an "earth" or "chassis" line at the foot. More often than not, the +HT feeders run horizontally above the valves, which at least helps to give a sense of relative voltages, but in other respects there is something to be said for running all the feeders below the valves, with the couplings stretching downwards to them (Fig. 5). Connections to earth, direct or through condensers, are usually taken vertically to the earth line; but to avoid such a criss-cross of lines as is necessitated by this some people, more especially Americans, use separate "earth" symbols at each point (Fig. 6).

There are so many possible variations in detail, even within the framework of convention, that circuit diagrams are as characteristic of those who draw them as their handwriting or finger-prints. There are numerous ways of drawing a valve. In America vertical electrodes, with zig-zag grids and plate-shaped anodes, are more usual than our horizontal dotted-line grids and full-line anodes. It always seems to me that a pentode suppressor grid is awkward; nobody appears to know what is quite the best way of joining it to the cathode without it getting in the way.

There is a growing tendency, it appears, to depict valves with their electrodes all out in the open, with no enclosing boundary. However illogical it may be to indicate a glass envelope in the same terms as a piece of copper wire, it does seem to me that a good thick ring around a valve shows it up clearly. There is something almost indecent about the other way, somehow.

The most obvious purpose of a circuit diagram is to show the connections. Thus it might be used for wiring-up. That is the structural use. There is also the functional use, which perhaps was not the one first intended, but it is very valuable all the same. Only brains like Einstein's, accustomed to abstract thought, would be able to visualise the action of radio circuits in terms other than diagrams. When working out some problem, such as the nature of a mysterious fault, do you mentally follow the workings through glass and metal valves and chokes and transformers in commercial shapes, or do you think diagrammatically?

For understandingly complex modern circuits, particularly those with AVC and kindred systems, the conventional diagram

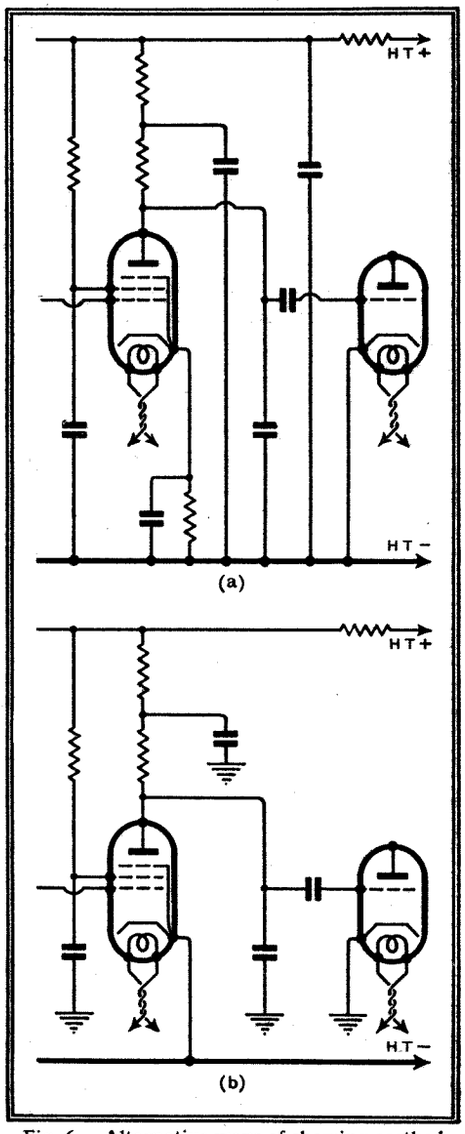

Fig. 6.—Alternative ways of showing earthed points. Method (*b*) cuts out many crossing wires, but is not so easy to follow if one has become used to method (*a*).

is not ideally adapted. I have worked out a form of diagram that suits me very well for this purpose. But apparently other people understand complex circuit actions with the aid of the conventional diagram, or else don't understand them at all.

Like all symbolic aids to thought, circuit diagrams have their limitations as well as their advantages. They must not be made a substitute for reality. The owner of paper money, by forgetting that it has no more intrinsic value than waste paper, apart from the credit of the issuing concern, may be stung. So may the earnest radio student who takes a diagram too literally. The diagram assumes that all electrical quantities are available in separate lumps, like chemicals in bottles, and that one can make up a circuit like a prescription. Instead of which they are more like the smells from the said chemicals when the stoppers have been left open for some time—each one strongest near its own bottle, but pervading the surrounding neighbourhood and mixing inseparably with the others. This is particularly true at very high frequencies, so that the diagram may in fact show only a part of the story. An example given by W. T. Cocking some time ago was an oscillator circuit in which the unseen valve capacities are among the most important circuit elements (Fig. 7). Experience shows how far to trust a circuit diagram.

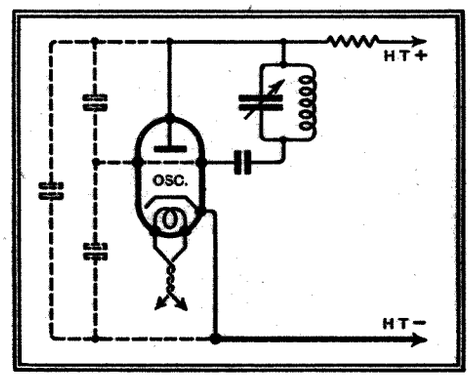

Fig. 7.—An example of a circuit diagram which does not show how the circuit works. The dotted portions, representing valve capacities, are necessary to reveal that it is actually a Colpitts oscillator circuit.

Radio Interference and its Suppression. By J. H. Reyner. Pp. 130. Chapman and Hall, 11, Henrietta Street, London, W.C.2. 9s. 6d. net.

THIS book, the first on the subject to be published in this country, fills a gap which has existed far too long. It is evident that the author has aimed at producing a survey which would be easily understood by the non-technical reader, and which would at the same time have a definite instructional value to those persons who themselves come up against the problem of interference. In this he has been quite successful

From a purist point of view, the layout of the book may be considered somewhat unscientific. It is recommended to the reader that efforts should be made to effect a cure at the listener's end before looking for the source of the interference, a principle which the G.P.O. have always done their best to combat. Further, it may be argued that the chapter on short-wave working is not proper to a book on radio interference. Nevertheless, from the point of view of the ordinary listener, there is much to be said for the author's arrangement. A few technical inaccuracies have crept in, but these are not likely to mislead the reader seriously.

A list might well have been included of firms making radio interference suppression devices, particularly as there are several references to the products of one particular firm.

This book at last meets a need of the dealer and service man. J. N.

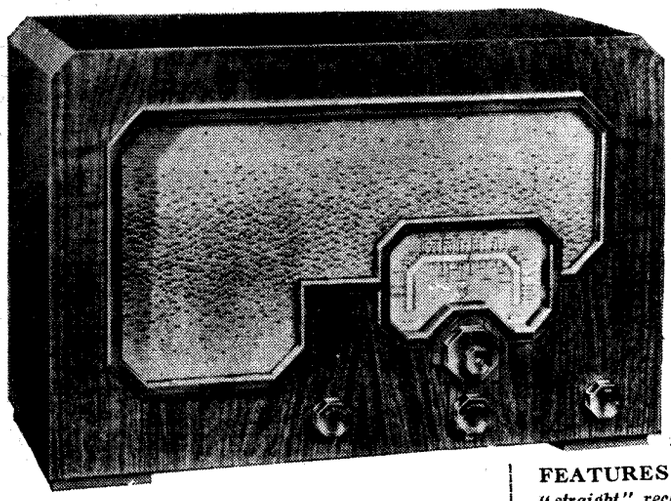

Cossor

MODEL 378

A WELL-TURNED-OUT "STRAIGHT" THREE-VALVE RECEIVER FOR AC MAINS

FEATURES. — ***Type.*** — *Table model "straight" receiver for AC mains.* ***Circuit.*** — *Var.-mu pentode HF amplifier—pentode detector with reaction — pentode output valve. Full-wave valve rectifier.* ***Controls.***—*(1) Tuning (with trimmer). (2) Volume. (3) Reaction. (4) Wave-range and on/off switch.* ***Price.***—*8 guineas.* ***Makers.*** — *A. C. Cossor, Ltd., Highbury Grove, London, N. 5.*

THIS set is a development of last season's Model 368 and incorporates the "Super Ferrodyne" iron-cored coils which contributed to the success of the earlier model. A very attractive cabinet fitted with a new style of station indicator set in a bronzed die-cast frame gives the set the appearance of one of much higher price.

Pentode valves are used in all three stages of the circuit. The first is a variable-mu HF amplifier with grid and screen volts controlled by a variable resistance in the cathode return lead. A single tuned circuit in the aerial input is coupled to the aerial by a combination of magnetic and capacity coupling on the medium-wave band and by magnetic coupling only on the long waves.

A transformer in which the unusual practice of tuning the primary has been adopted couples the HF valve to the pentode grid detector. Reaction is applied to the transformer through the usual combination of capacity and fixed magnetic coupling. Stopping resistances are included in series with the reaction circuit and the secondary winding of the HF transformer to suppress possible oscillation at the natural frequencies of these circuits. Resistance-capacity coupling is employed between the detector and the pentode output valve. The latter is directly heated and a centre-tapped resistance is connected across the filament to obtain a neutral point for the connection of the bias resistance.

Fixed tone correction is applied in the output circuit by a condenser across the primary of the output transformer of the eight-inch moving coil loud speaker. Sockets for an external loud speaker are also connected across the transformer primary. A high impedance external loud speaker will therefore be required, and care must be taken not to allow extension leads to come into contact with the chassis as one of the sockets is connected to HT+. A full-wave rectifier supplies the HT current, which is smoothed by the loud speaker field in conjunction with the electrolytic condensers.

The controls are four in number, and it is important to note that the subsidiary knob of the tuning condenser is not a slow-motion vernier but actuates a small air-dielectric trimmer. Thus accurate alignment is possible at all parts of the tuning range, though in actual practice it will generally be necessary only to adjust the trimmer once when the set is first installed. However, it is satisfactory to know that one can be sure of absolutely accurate alignment when it is a question of separating adjacent transmissions of approximately equal power.

It has often been pointed out that the secret of obtaining the best results from a "straight" receiver lies in the proper manipulation of the volume and reaction controls. Selectivity can be improved by first reducing volume and then increasing reaction to a point just below oscillation, finally increasing the volume to the required level. In this receiver this process is really much simpler than it may sound, for there is less interdependence than usual between the volume and reaction controls. But this is not the only feature which contributes to the pleasure of operating this set, for it is virtually impossible to produce unpleasant noises from the loud speaker through inadvertently turning up the volume too high. If this is done all that happens is that there is a slight reduction of volume without any unpleasant threshold effects near the overload point. It is important, therefore, to make sure that one is operating below the point of maximum volume, and it should be a matter of routine to turn back the volume control and then increase slowly before settling down to enjoy a programme.

The constancy of reaction is also a noteworthy feature of this set, and the slight increase which is necessary to follow the oscillation point from bottom to top of the wave-range is so small that for most purposes it is sufficient to set the reaction at a point somewhere near the bottom of the wavelength scale, and then to ignore it unless maximum selectivity is called for.

The range of the long-wave band is comparable with that of

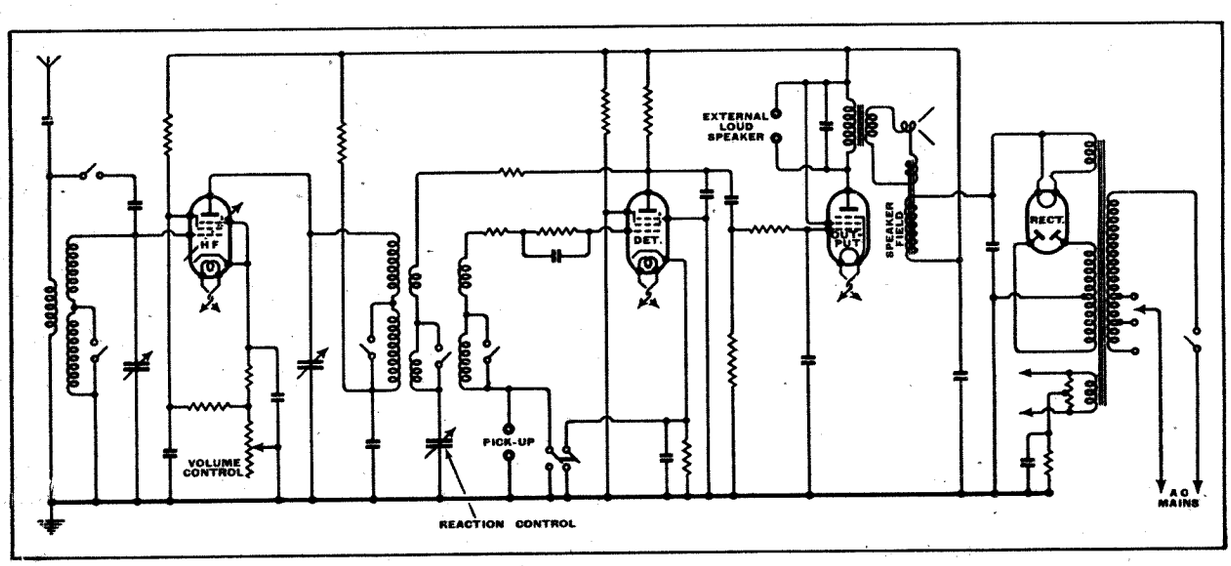

Pentode valves are used in all three stages of the circuit. When the wave-range switch is turned to the "gram" position, the detector valve becomes the first LF amplifier with automatic negative bias.

Cossor Model 378—

the majority of 3- or 4-valve superheterodynes, and the ratio of signal strength to background noise is very much better. On the medium waveband there are not, perhaps, so many weaker stations to choose from, but the leading Continental programmes from stations such as Radio Normandie, Cologne, and Paris PTT are capable of fully loading the output valve throughout the day as well as after nightfall.

Selectivity is, of course, less than one would expect from a superheterodyne, but the use of iron-cored tuning coils gives results which are a close approximation to the theoretical maximum possible with two tuned circuits. There is a background from Droitwich when listening to the Deutschlandsender, but the latter station is easily separated from Radio Paris. On the medium-wave band no difficulty is experienced when using the set in Central London in receiving Radio Normandie clear of the London National, while the London Regional programme can be eliminated outside the section of the dial extending from approximately 320-360 metres.

There is not a great deal of extreme top or bass response from the loud speaker, but the reproduction is free from the resonances in the upper middle register which frequently give a nasty edge to the reproduction of music and so limit the volume which can be tolerated. The volume control in the Cossor set can always be turned to maximum without fear of any unpleasantness of this kind, and it will be found that the volume level thus obtained is exactly right for the average size living room.

The chassis is a sound, workmanlike job, and it is interesting to find that a large number of joints in the wiring have been reinforced with binding wire before soldering. The chassis is constructed of heavy gauge steel which is copper-plated on the under side to obtain good contact for all earth connections. Where steel spindles have been used for some of the contacts they have been given a black rust-proof finish. The tubular bracing struts across the bottom of the chassis are also finished in this way. They support a stout fibre protecting panel which is shaped to register with a rectangular hole cut in the base of the cabinet so that it is possible to test components without removing the chassis from the cabinet. Should this be necessary, however, the work is facilitated by the use of eyelet connections for the loud speaker leads instead of the soldering tags which appear to be very much in favour.

From every point of view the Model 378 is a well-turned-out set and one which gives its maximum performance with the minimum demand on the skill of the operator.

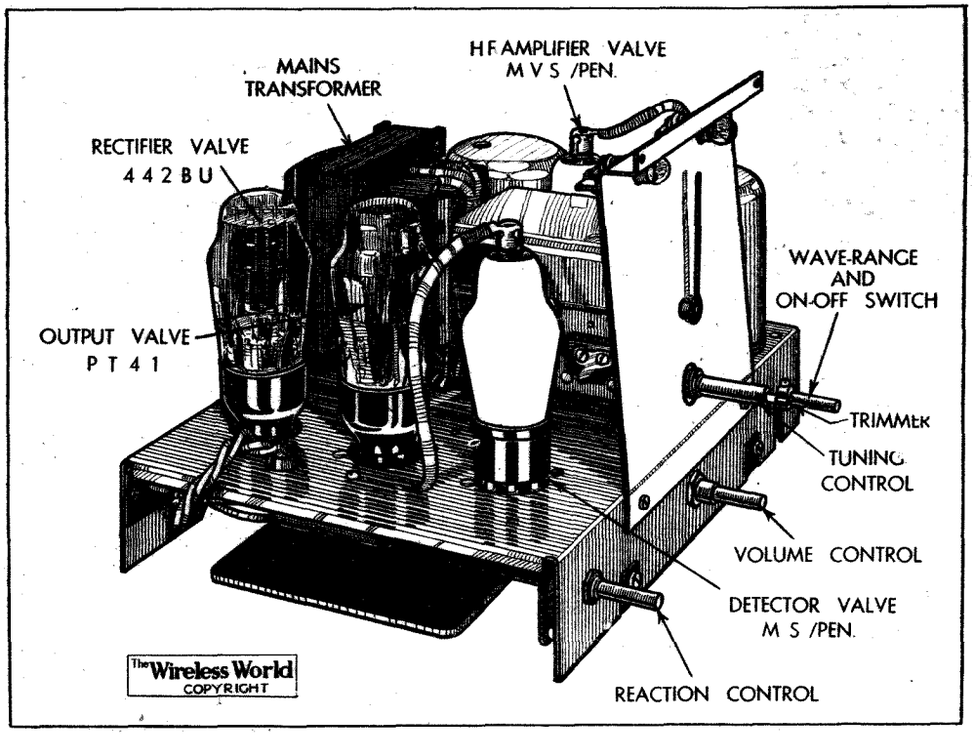

A matt white panel illuminated by twin pilot lamps diffuses uniform indirect lighting behind the wave-range scale, which is mounted on a glass window in the cabinet.

The Television Society

THE Secretary of the Television Society has asked us to point out that "The Television Journal," to which reference was made in a recent issue, has no connection with "The Journal of the Television Society," nor have the institutions which we referred to on that occasion any connection with the Television Society itself.

SUMMARY OF SETS TESTED AND REVIEWED BY *THE WIRELESS WORLD*

For the convenience of potential purchasers of manufacturers' receivers, the following list has been compiled of sets reviewed in the pages of *The Wireless World* during the last three months. This list will be supplemented from time to time with the details of future reviews. An earlier list covering reviews during the previous six months was printed on page 316 of the issue dated March 27th, 1936.

It is possible to give only a brief summary here, and readers are referred to issues, dates of which are given in the last column, for the full reviews.

Maker.	Set.	Type.	Circuit, Valves excluding rectifier.	Wave Ranges.	Price.	Reviewed.
					£ s. d.	1936.
Pye Radio, Ltd.	Empire	Console	Superhet 9 (A)	13–33, 30–82, 198–560, 850–2,000 m.	29 8 0	April 10th
Ferranti, Ltd.	All-Wave Straight 3 ...	Table	Straight 3 (A)	19–51, 200–550, 900–2,000 m.	9 19 6	May 8th
Burndept, Ltd.	Attaché	Portable	Straight 3 (B)	M, L	5 18 6	„ 15th
R. A. Rothermel, Ltd.	Rothermel-Hammarlund "Super Pro."	Table	Superhet 14 (A)	15–30, 30–60, 60–120, 120–259, 259–555 m.	89 5 0	„ 29th
General Electric Co., Ltd.	Fidelity All-Wave Superhet.	Table	Superhet 7 (A)	16–98, 200–550, 1,000–2,000 m.	26 5 0	June 5th
Aerodyne Radio, Ltd.	Model 49	Table	Straight 3 (B)	18–50, 200–550, 800–2,000 m.	7 7 0	„ 12th
Universal High Voltage Radio, Ltd.... ...	Hyvoltstar Eight ...	Table	Superhet 7 (U)	13–33, 28–73, 200–560, 800–2,200 m.	31 10 0	„ 26th

Abbreviations: A = AC; U = universal; B = battery; M = medium; L = long.

Listeners'

Outstanding Broad

SHANKLIN is featured in this week's programme when Powis Pinder's Concert Party, "Sunshine," will be heard from this South Coast resort

IN addition to its intrinsic interest, the special programme devised by the National Broadcasting Corporation of America to give English listeners an impression of the celebrations on July 4th, Independence Day, America's most important national holiday, is a striking example of the willing international co-operation which is one of the pleasantest and most important aspects of broadcasting.

From place after place of that vast continent, short actuality flashes will paint a vivid sound picture of the junketings, and will be radiated nationally at 8 on Saturday. The Liberty Bell in Philadelphia, which was badly cracked in 1843, will be heard and the Mayor of Philadelphia will speak; a running commentary on part of a National League Baseball game at Chicago; a horse race at Arlington Park, and many other lively short broadcasts are to be included.

THE "ROYAL" SHOW

THE broadcast from the Royal Agricultural Show at Ashton Park, Bristol, will be no stolid reading of a schedule of entries, pedigrees and awards. In thirty-five minutes listeners will get an impression of the Show from descriptions by A. G. Street in the cattle lines and A. W. Ling in the dairy quarters, while humour will be in the hands of Mabel Constanduros and the Buggins Family. This broadcast tonight (Friday) at 7 (Nat. and Reg.) should not be missed by country listeners.

VICE VERSA

MANY who have read F. Anstey's humorous novel, "Vice Versa," will remember that the scene shifts from the house of Mr. Paul Bultitude in Westbourne Terrace, in January, 1881, on the day of his son Dick's return to school, to a cab on its way to St. Pancras Station, a train, Crichton House School, and back to "Home, Sweet Home." The alternative title to the book, "A Lesson to Fathers," should make an appeal to many, and doubtless a number of schoolboys will encourage their parents to listen to the radio play by H. M. Delafield from this book, which will be produced by Barbara Burnham and broadcast on Monday (Nat.) and Tuesday (Reg.) at 8 each evening.

FROM BUDAPEST

A HALF-AN-HOUR'S programme of Hungarian music from Budapest by the Radio Budapest Salon Orchestra, conducted by Stephan Bertha, will be relayed in the Regional programme at 6.15 on Sunday.

ERASMUS

A STUDY, by Felix Felton, of Erasmus, the Dutch humanist, who died 400 years ago, will be broadcast on Sunday in the National programme at 10.15. It deals with his relation to his times compiled from his own letters and from those of Henry VIII, Martin Luther, Sir Thomas More, and other notable contemporary figures. The name part will be played by Ronald Simpson, and other members of the cast will include Charles Lefeaux, Abraham Sofaer, and J. B. Rowe.

"SUNSHINE"

THE third relay in the series, "Shows from the Seaside," will be that of Powis Pinder's concert party, "Sunshine," from the Summer Theatre, Shanklin. The show will be introduced by Harry S. Pepper and Davy Burnaby, and broadcast in the National and Regional programmes at 6.30 on Monday.

A BOYS' BAND

NOW on its second visit to the British Isles, the Vancouver Kitsilano Boys' Band will be heard by listeners at 7.30 (Nat. and Reg.) on Tuesday. It was founded in 1928 under its present conductor, Arthur W. Delamont, at Kitsilano, a suburb of Vancouver. Beginning in a small way with a few boys, it now numbers about seventy, ranging in age from eleven to nineteen. It has to its credit the gaining of several championships, including that of the world at Chicago in 1933.

MUSICAL DRAMA

THE musical play "The Silver Patrol," written and composed by Bruce Sievier, is being revived in the National programme on Thursday at 8 and again on Friday, July 10th, with a strong cast, including Harry Welchman, Jay Laurier, Marjery Wyn, Miriam Ferris, Sydney Lester, and Laurence Green. The prologue is set in a London hotel, after which the scene changes variously from s.s. "Aurora" to Government House, Perada, Dream Valley Ranch, and the mountains of Southern Pinelands. The production of this romantic musical drama is in the hands of Max Kester.

TWO GOLDEN VOICES

THE Girl with the Golden Voice, Miss Jane Cain, whose voice we shall soon hear if we dial TIM to ascertain the correct time, will be heard in the appeal on behalf of the British Wireless for the Blind Fund on Sunday at 8.45 (Reg.).

America's golden-voiced tenor, Morton Downey, will be returning in a short programme with the B.B.C. Variety Orchestra at 9.30 (Reg.) on Monday.

MINE HOST Stanelli, who on Wednesday at 8.30 in the Regional programme will be celebrating the first anniversary of his Bachelor Party with another gathering at which Norman Long, Al and Bob Harvey, Sam Mayo and Mario Lorenzi will be among the guests.

Guide for the Week

casts at Home and Abroad

HENLEY AND WIMBLEDON

THE Henley Regatta enters the broadcast programmes for the first time on Saturday afternoon. From 2-5.15 the National programme will include running commentaries from Henley and Wimbledon. Details of the races to be described and the times of transmissions will be announced at 2. The finals of the tennis championships at Wimbledon, always a source of great excitement, will be commented upon by Colonel Brand and Captain Wakelam at intervals during Friday and Saturday afternoons.

LIBERTY, at the entrance to New York Harbour, symbolising America's Independence. The N.B.C. Programme on Saturday should give listeners an impression of the jollifications on this great national holiday.

OPERA AND BASSOON SOLO

THE one-act comedy "Susanna's Secret," by the German-Italian composer, Wolf-Ferrari, will be broadcast in the Regional programme at 8.45 on Saturday. This opera, first performed in Munich in 1909, is in a Mozartian frame, into which the composer has introduced modern effects with both pleasing and effective results. The soloists will be Noel Eadie and Harold Williams, with the B.B.C. Midland Orchestra.

The same composer's Concertino for solo bassoon will be heard in the National programme on Monday. It is rare that the bassoon is treated as a solo instrument, and this broadcast is therefore something of a novelty.

APOLLO FOLLIES. The leading lady, Marguerite Viby, and her partner Amble Naess with the chorus. Kalundborg will broadcast in full, from 8.15 to 10.45 tonight (Friday), the 1936 Apollo Follies from the Apolloteatret.

OPERA ABROAD

THAT erratic genius Eugen d'Albert, son of a one-time ballet-master at Covent Garden, was one of the most brilliant pianists of his time. Yet in the midst of an extremely full and brilliant concert-hall life he managed to find time to write many operas: one of these, "Tiefland," undoubtedly his masterpiece, is being given at 8.5 this evening (Friday) by Frankfurt. A complete recording of Giordano's four-act opera "Andrea Chénier" is included in tonight's programme at the same time from Bucharest. This opera was first produced at the Scala, Milan, in 1896 and in London in 1903.

Milan is giving us something refreshingly unfamiliar at 8.40 on Saturday. A Biblical opera "La Figlia di Jorio" by the septuagenarian Franchetti.

Recorded scenes from Wagner's "Ring" operas: "The Rhinegold," "The Valkyrie," "Siegfried" and "The Dusk of the Gods" are included in the midnight programme from Frankfurt and Stuttgart on Sunday.

ENGLISH TALK FROM OSLO

IN connection with the Sunday Schools World Congress now being held in Norway, Dr. Luther A. Weigle, from Yale University, will broadcast a talk in English from Oslo on Thursday at 6, when his subject will be "Christianity and the World Crisis."

ACADEMIC SINGING

WHILST visiting Sweden the famous American choir, Yale Glee Club, are to give a programme of shanties, negro spirituals and students' songs from the Swedish stations on Tuesday from 9-9.45.

DANISH-AMERICANS

THE American Independence Day is celebrated in Denmark, where many Danish-Americans will gather in Rebild National Park in the middle of the vast heathlands of Jutland. Speeches will be given by the Premier, the American Minister, Mrs. Bryan Owen and several other Americans. The festival will be broadcast by Copenhagen and Kalundborg from 3-5 on Saturday.

THE AUDITOR.

HIGHLIGHTS OF THE WEEK

FRIDAY, JULY 3rd.

Nat., 7, Relay from the "Royal" Show. 8, The B.B.C. Singers.
Reg., 8, Edna Best in "The Silver Cord." 9.30, Morton Downey. 9.40, B.B.C. Military Band.
Abroad.
Vienna, 8.30, Vienna Symphony Orchestra, Alice Ehlers (harpsichord).

SATURDAY, JULY 4th.

Nat., 2-5.15, Wimbledon and Henley relays. 7, Rawicz and Landauer, two pianos. 8, Independence Day programme.
Reg., 8.45, "Susanna's Secret." 9.30, John Reynders and his Orchestra.
Abroad.
Frankfurt, 8.10, Opéra-Comique and operetta music.

SUNDAY, JULY 5th.

Nat., 7, Recital, Sarah Fischer (soprano) and Zoltan Szekely (violin). 7.55, Service from Truro Cathedral. ¶B.B.C. Theatre Orchestra. 10.15, "Erasmus."
Reg., 6.15, Budapest relay. 9.20, Sonata recital, Albert Sammons (violin) and William Murdoch (pianoforte).
Abroad.
Brussels II, 8, Band of the Belgian Grenadier Guards.

MONDAY, JULY 6th.

Nat., 6.30, Concert Party, "Sunshine." ¶Callender's Senior Band and Harry Crindle (bass). 8, "Vice Versa." ¶Rawicz and Landauer.

MONDAY, JULY 6th (*continued*).

Reg., 8, "Melody Out of the Sky," Jay Wilber and his Band. ¶B.B.C. Singers. 9.30, B.B.C. Theatre Orchestra.
Abroad.
Paris (Eiffel Tower), 8.45, Inghelbrecht Festival, the composer conducting.

TUESDAY, JULY 7th.

Nat., 7.30, The Vancouver Boys' Band. ¶"Romance in Rhythm." 9, Pianoforte Recital, Myra Hess.
Reg., 8, "Vice Versa." ¶"The Vagabond Lover."
Abroad.
Berlin, 9, "Ballet at the Court of Marie Theresa," music of the period by the Hans von Benda Chamber Orchestra.

WEDNESDAY, JULY 8th.

Nat., 7.15, The Adolph Hallis Quintet. ¶Music from the Movies. 8.30, B.B.C. Orchestra (C) with Orrea Pernel (violin).
Reg., 8, Piano Recital, Isabel Gray. ¶Stanelli's Bachelor Party.
Abroad.
Munich, 9.5, "Meister Schwarbe," musical comedy from Nürnberg.

THURSDAY, JULY 9th.

Nat., 6.30, Mantovani and his Tipica Orchestra. 8, "The Silver Patrol." 10.20, Chamber Music, The Philharmonic Ensemble.
Reg., 8.30, B.B.C. Orchestra (C). 9, "Is That the Law," Talk. ¶B.B.C. Dance Orchestra.
Abroad.
Kalundborg, 8, "A Summer Review," from the Bellevue Theatre, Copenhagen.

UNBIASED

By FREE GRID

Blushes in the Bathing Tent

IN spite of advancing years and rapidly worsening rheumatism, I still indulge, when at the seaside, in the gregarious habit of standing for hours in a perspiring queue waiting for a vacant bathing hut. There is, I think, nothing more conducive to acute bodily discomfort than the average bathing hut on the sands; no, not even a provincial hotel bedroom, for the latter at least does not have particles of sand on the floor, and is not overpoweringly hot and suffocating.

I was pleasantly surprised the other week, however, to find that at least one seaside resort had made an attempt to lessen the acute discomforts of these wretched cells by providing music in the shape of a loud speaker fed from a wireless set. As I was undressing for a bathe one morning, I found the broadcast music very pleasant indeed, it being, for a wonder, of a bright and cheerful nature. There always appears to be some fly in the ointment of life, however, and this occasion was no exception. For some inexplicable reason the loud speaker seemed to go dumb whenever an announcement was made between the items, and so I was unable to find out the titles of one or two pieces of music which appealed to me. As this irritating process continued I grew considerably annoyed and racked my brains to think what particular fault in the receiver could be causing this trouble.

. . . grabbed up my clothes and hurried me off . . .

Eventually I gave it up, and in a state of extreme annoyance sallied forth in my bathing costume to report the matter to the attendant. When I had eventually unearthed this worthy and poured forth my tale of woe to him, I was astonished to see him turn deathly pale. Before I could say any more he seized me by the arm, begging me forthwith to take him to my hut. When we arrived there he grabbed up my clothes and hurried me off willy-nilly to an empty hut two or three rows away.

When I had recovered my breath I naturally demanded an explanation of his extraordinary conduct, and, after mopping his brow, he informed me that by some error I had been put in a hut reserved for ladies. "Thank goodness, none of them women didn't see you," he concluded fervently, "or I should have been for it." Even so, I failed to see what connection this had to do with my complaint about the wireless, and, in response to further enquiries, he unfolded a truly extraordinary tale.

It appeared that the particular seaside resort which I had honoured with my presence was well known for its Victorian respectability, and usually attracted a class of visitor of the ultra-Pecksniffian type, more especially in the case of the ladies, who were mainly elderly spinsters. When the idea of relaying the wireless programmes to the bathing huts was first mooted in the town council there appeared to be nothing in the proposal to offend the moral susceptibilities of even the most narrow-minded visitor, provided, of course, that only B.B.C. programmes were transmitted.

However, hardly had the service been inaugurated by the local mayor, I was told, when there arose a great outcry in the section of the dressing huts reserved for females, and several of the latter were seen to emerge in haste and confusion. An immediate enquiry was ordered, and it was found that the cause of the hasty exodus was the extreme embarrassment felt by certain Early Victorian ladies when caught in their *déshabille* by the well-modulated voice of the announcer. At a hastily convened meeting of the town council it was at first proposed to petition the B.B.C. to employ only lady announcers during bathing hours, but somebody pointed out that this would merely have the effect of transferring the embarrassment to the men bathers. Eventually the problem had been solved, so my informant told me, by wiring all the ladies' huts to a switch in the office controlled by a vigilant and acidulous-looking female, who had been selected for the office after passing, with flying colours, an examination in the proprieties.

The only thing that puzzles me is what will happen when, in a few years' time, they start relaying the television programmes to the bathing huts. You see, most of the performers in the various orchestras which the B.B.C. relays are men.

A Sartorial Problem

MANY people make it a rigid rule to don the appropriate garb when listening to the various B.B.C. programmes. They would not think, for instance, of listening to the commentary on the Eton and Harrow match at Lord's without being dressed in the manner appropriate to a personal visit to the match.

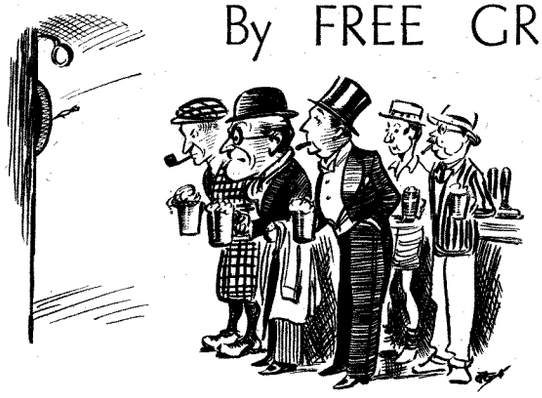

. . . found myself among an exceedingly motley audience . . .

It must be admitted, however, that the recent darts commentary from a local public-house set these good folks a pretty problem. They can take comfort, however, in the fact that in this instance they were not the only ones to be puzzled, as even those who make it an invariable rule to put in an appearance at all the special outside broadcasts of the B.B.C. were at a loss as to the correct dress to wear, and frantic appeals for help to the Q. and A. departments of certain of the tailoring and social journals merely brought forth the usual evasive answers.

I must confess that I was distinctly puzzled myself, and, as a result of several further visits to the sawdust bar of various pubs, I observed that the spectators at dart matches seemed to favour a cap and muffler, although there were a few who snobbishly affected a collar; but even they, I was glad to see, did not carry their vulgar ostentation so far as to wear a tie also.

Had every intending spectator of the match had the good sense to do as I did, all would have been well, but they evidently preferred to rely on the advice of the inevitable friend "in the know." The result was that I found myself among an exceedingly motley audience, the spectator on my left being in faultless "tails" complete with topper, while the enthusiast on my right was in loud checks with cap to match. There was a fair sprinkling of visitors clad in white sweaters and shorts, while some had evidently imagined that an English hostelry required the same sort of preparation for a visit as did the saloon of a mining camp in the Western States way back in the forties of the last century, if one could judge by the extensive preparations that they had made for a rough house.

Needless to say, we were all the subjects of many ribald comments by the regular *habitués* of the place, and at one time I thought there would be trouble owing to several of the evening-dress brigade having their toppers made into targets for a little friendly dart practice before the match began. To avoid such unpleasant *contretemps* in the future I can only suggest that the B.B.C. issue special advice concerning the correct dress for these occasions.

New Apparatus Reviewed

Recent Products of the Manufacturers

HARTLEY TURNER TWIN DIAPHRAGM LOUD SPEAKER

AS FAR as the main diaphragm and field magnet are concerned, this speaker is identical with the Hartley Turner standard model. The attachment of a subsidiary cone of more acute angle inside the main cone has resulted in some improvement of the extreme top. The approaches to the 5,000-cycle peak have been curtailed, with the result that it is less noticeable, and instead of a progressive drop above the peak, the response falls quickly back to the general level of the curve at 6,000 cycles, and beyond that maintains a good average level which shows no sign of falling off at 10,000 cycles. Some additional irregularities have crept in between 2,000 and 4,000 cycles, but the lower region of the curve maintains the high standard of the original and is unusually free from harmonic distortion and cross modulation effects.

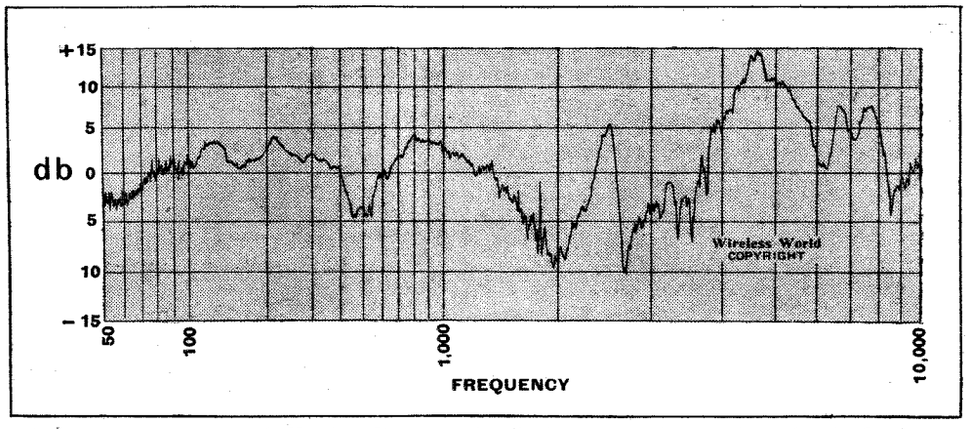

Axial response curve of Hartley Turner twin diaphragm speaker on irregular baffle (area approx. 22 sq. ft.). Input 1 watt, microphone distance 4 ft.

Hartley Turner twin diaphragm loud speaker.

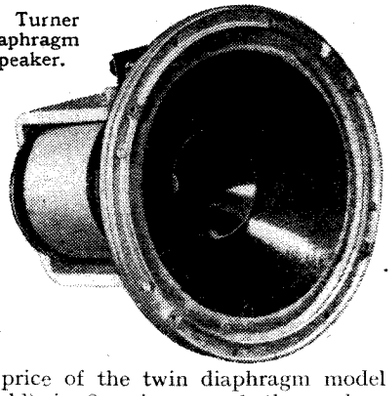

The price of the twin diaphragm model (DC field) is 8 guineas and the makers are Hartley Turner Radio, Ltd., Thornbury Road, Isleworth, Middlesex.

MONARCH ALL-WAVE SIGNAL GENERATOR

THE Monarch Model 12 All-Wave Standard Signal Generator has been designed to meet the needs of those requiring a testing set with a high standard of accuracy both as regards the frequency calibration and the control of the output. It can be said to occupy an intermediate category between the simpler types of serviceman's modulated test oscillator and the laboratory style of standard signal generators.

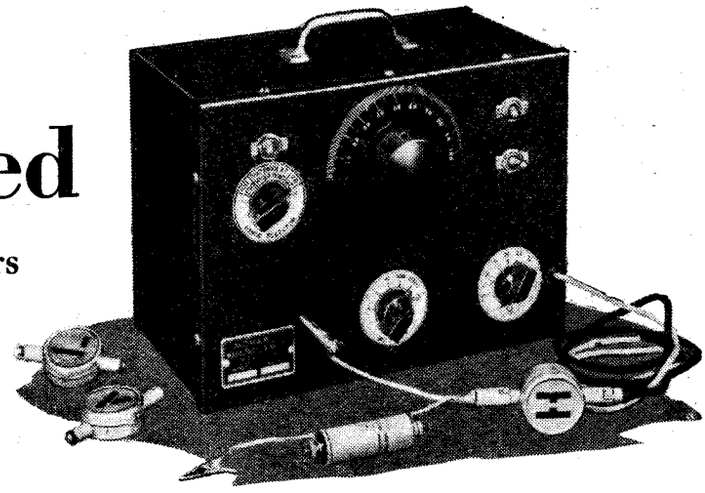

Lyons Monarch Model 12 All-Wave Standard Signal Generator.

It has a frequency range of 100 kc/s to 30 mc/s, this band being covered in five ranges by means of a selector switch. Fundamental frequencies only are used throughout this range, but the scope of the instrument can be extended to take in the ultra-high frequencies by utilising the second harmonics on the highest frequency range.

The generator is fitted with a well designed resistance attenuator comprising a multiplier unit and a variable potentiometer calibrated directly in microvolts. This enables the HF output to be varied continuously from below 0.5 microvolts to 0.1 volt. There is, also, a voltage divider available as an accessory to extend the lowest range down to 0.05 microvolt.

A separate modulating valve is embodied in the set and the LF output from this stage can either be used to modulate the HF oscillator or applied direct to the attenuator so that an audio-frequency signal is available for testing LF equipment.

Particular care has been taken to provide an accurate HF calibration, and in place of the familiar direct-reading frequency scales, calibration curves are prepared for each range, and these are drawn on a chart, and to a scale that enables a high order of accuracy to be obtained in converting condenser dial readings into frequency.

Test measurements were made at several points on each of the five ranges and in every case the accuracy of the calibration was found to be better than one per cent. when compared with standard laboratory equipment.

Each instrument is supplied with external dummy aerials for broadcast and for short-wave use respectively, a mains plug-cum-lampholder adaptor and a condenser to interpose in the "earthy" lead from the generator. There are several other useful accessories available also. It is AC operated and designed for 200/230 volts 50 c/s mains.

Complete with the accessories just mentioned, it costs £21, and the suppliers are Claude Lyons, Ltd., 40, Buckingham Gate, London, S.W.1.

ERIE 3 N AND 4 N INSULATED RESISTORS

THE new style of insulated resistors of ¼ and ½ watt rating, and styled the types 3N and 4N respectively, are now obtainable from The Radio Resistor Co., Ltd., 1, Golden Square, Piccadilly, London, W.1.

In the smaller size the actual resistance element measures only ⅜in. long and is ⅛in. in diameter. It is fitted with brass end-caps, to which the connecting wires of tinned copper are secured, and this element is then enclosed in a ceramic insulating tube, the outside of which has the distinguishing colour bands indicating its resistance value. The half-watt pattern are identical in form, but they are ¼in. longer.

The advantages of an insulated resistance are many and so obvious that there is no need to enumerate them here. The insulating material is not affected by the small amount of heat dissipated by these resistors and on full load, or even with an overload current, no discoloration of the markings occurred.

Several samples of each size have been tested and found perfectly satisfactory:

New Erie ½-watt insulated resistor showing also the small element in the ¼-watt size.

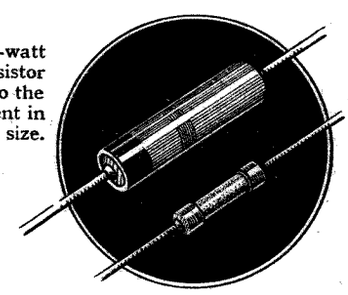

their resistance values were all well within the usual tolerance for resistances of this type. There was no measurable change in values after the resistances had had a full load test and their values measured when cool; incidentally, the temperature rise is slight with such low power dissipated and the value when "hot" was, for all practical purposes, the same as when cold. The new insulated pattern costs 1s. each in either rating, and for all values.

SIMPLIFYING THE PROBLEM OF DESIGN

High-pass and Low

III.—The Practical Design of Simple Filters

THE third of a short series of articles in which the design of electrical filters is put on a relatively simple and straightforward basis. This Part discusses the design of an HF stopping filter — a refinement that would improve many receivers.

NOW that we are familiar with the theoretical circuits of filters, we can begin to consider how to realise them in practical form.

For working out the values of inductance and capacity for a simple prototype filter we require to know two things: the frequency of cut-off (f_c) above or below which the filter is required to attenuate, and the resistance R into which it has to work. It should be emphasised that the filter must be closed at each end by a resistance R, otherwise there will be mismatching and unwanted attenuation. As already stated, f_c is determined by the product of L and C, while the correct load-resistance R is fixed by their ratio. If L and C are increased proportionally (thus keeping their ratio constant) the frequency of cut-off is lowered, while if L is increased and C decreased in the same proportion, keeping their product constant, we change only the value of R, which rises.

For an m-derived cell we also require to know m, or alternatively the ratio between f_c and f_∞, which determines m. The curves of Fig. 9 enable us to read off the value of m and n for any ratio of f_c to f_∞ that we may require; alternatively, if we fix on some value of m arbitrarily chosen for a constant-impedance termination (usually $m=0.6$) or for a rapid cut-off, we can find from Fig. 9 the relation between f_∞ and our chosen value of f_c, and we can at the same time find n without the trouble of calculating it from the formula.

The few indispensable formulæ, that cannot be replaced by curves, are given in the following table. None of them, it will be seen, is of very awe-inspiring intricacy. Units, as usual, are of vital importance; attention is drawn to the explanatory note at the bottom of the table.

TABLE.

Component. (See Figs. 5 and 6.)	Low-Pass.	High-Pass.
Prototype.		
L	$R/(3.16f_c)$	$R/(12.65f_c)$
C	$1/(3.16Rf_c)$	$1/(12.65Rf_c)$
m-derived.		
L_1	mL	L/n
L_2	nL	L/m
C_1	nC	C/m
C_2	mC	C/n
m-derived; $m=0.6$ (terminating half-cell).		
L_1	0.6L	3.75L
L_2	0.267L	1.67L
C_1	0.267C	1.67C
C_2	0.6C	3.75C

UNITS.
R in ohms.
f_c in cycles per second.
L, L_1, L_2 in henrys.
C, C_1, C_2 in farads.

Before embarking on a composite filter, we will take a simple case for which a prototype filter, in spite of its ill-defined cut-off frequency, is good enough. We have a "straight HF" set in which the detector is a high-impedance valve coupled by a 50,000-ohm resistance to the LF amplifier. We find that HF currents in the LF amplifier and loud speaker are causing distortion and instability, and we propose to design a filter to cut them out.

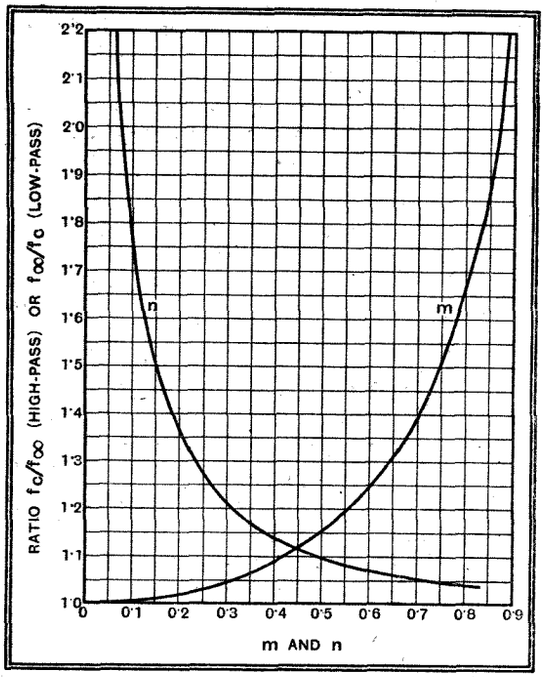

Fig. 9.—Values of m and n for different values of f_c/f_∞ (high-pass) or f_∞/f_c (low-pass). $m=\sqrt{1-(f_c/f_\infty)^2}$ (low-pass) or $\sqrt{1-(f_\infty/f_c)^2}$ (high-pass). $n=(1-m^2)/4m$.

A prototype filter is good enough because:—

(1) We only wish to distinguish between currents at 150 kc/s (2,000 metres), which is the lowest frequency to which the set will tune, and 10,000 c/s, the highest speech-frequency.

(2) Provided we arrange the cut-off frequency to be not too near 10,000 c/s, the impedance-irregularities in the neighbourhood of cut-off will not worry us; hence there is no need to regularise the impedance with an m-section.

(3) Provided that the cut-off frequency is not too near 150 kc/s, the slowness of the rise in attenuation will not matter; at 150 kc/s it will already be high, and will be higher still for all higher frequencies to which the set may be tuned.

With (2) and (3) in mind, we choose 40 kc/s for the cut-off frequency f_c. The load into which the filter works will be the anode resistance on the one hand and the valve resistance on the other. Since, for so rough a filter, exact matching will not be needed, we will take 30,000 ohms as being a mean value between the two.

A prototype low-pass filter can have either a π or a T termination. In the latter case its impedance to high frequencies will be high, in the former case low. After a detector a low impedance to carrier-frequency currents is essential if anti-phase feed-back through the valve capacity is to be avoided; we therefore choose a π-termination for our present case. This has the further advantage of using fewer coils than would a T-terminated filter. We have, therefore, the circuit of Fig. 10, which shows two π-cells. Since $f_c=40{,}000$ c/s, and $R=30{,}000$ ohms, we find $L=0.238$ H. and $C=0.000267$ μF. The appropriate values are shown on the diagram.

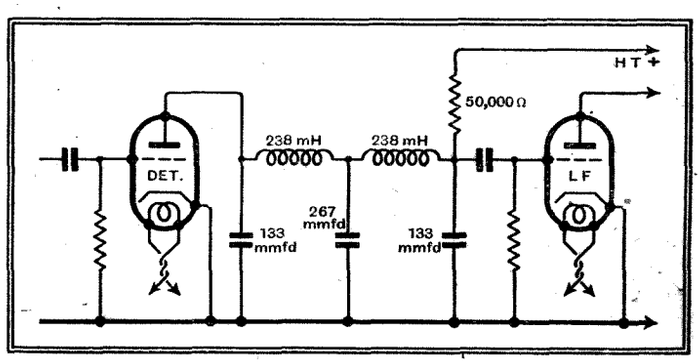

Fig. 10.—Two-cell π-terminated prototype low-pass filter in anode circuit of detector valve of HF set. $f_c=40$ kc/s.

Since coils can be wound to any desired inductance, but condensers generally have to be standard values, a certain amount of juggling with the exact values for L and

pass Filters

By A. L. M. SOWERBY, M.Sc.

C would be desirable if the filter were meant to have an exact cut-off or to match an exact load. In such a case as this we should make C = 0.00025 μF. without troubling to re-calculate the value of L; the change will raise slightly both correct load-value and cut-off frequency.

M-Derived Sections

In Fig. 11 are shown a series of response-curves giving the extent of filtering to be expected from both prototype and *m*-derived filters built up from normal coils and condensers. At 150 kc/s, which is 3.75 times the cut-off frequency, the attenuation of our prototype filter should amount to 35 db. per cell, or 70 db. for the two—a very handsome drop. In practice it will unfortunately be very much less, owing to the presence of self-capacity in parallel with the coils. The effect of this can be minimised only by reducing the anode resistance of the valve and re-designing the filter to suit. This, by making C larger, would correspondingly reduce the effect of the stray capacities.

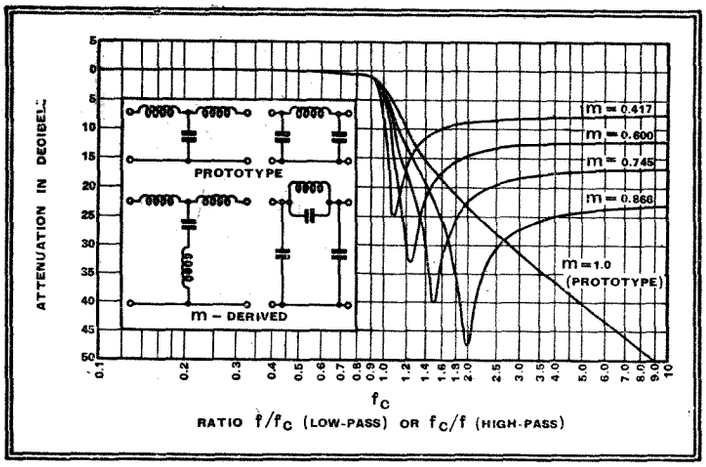

Fig. 11.—Attenuation in decibels, for one cell, of filters of different types. Carefully made air-cored coils are assumed.

If the set had been a superheterodyne matters would have been rather easier, for instead of having to deal with a whole range of high frequencies there is only the one intermediate frequency to filter out. To make a determined attack on a specified frequency an *m*-cell is obviously wanted (see curves of Fig. 11), and if we choose the π-form (Fig. 5*b*) in which the coil has a condenser in parallel with it, the self-capacity of the coil ceases to matter—we just add capacity enough to bring the total up to the required value.

Once again, high attenuation is more valuable to us than sharp cut-off, so we make *m* large; Fig. 11 offers us an attenuation of 47½ db. per cell at $f\infty$ if we make $m = 0.866$. For this, as Fig. 9 shows, $n = 0.072$, and the frequency of cut-off is just half that of maximum attenuation ($f/f_c = 2$). If the intermediate frequency is the usual 110 kc/s we shall have to take 55 kc/s as the value for f_c. Assuming the filter to be used in the anode circuit of the valve of Fig. 10, we therefore have: R = 30,000 ohms, f_c = 55,000 c/s, m = 0.866, n = 0.072.

First we find the values for the prototype filter, which come out at L = 173.5 mH., C = 193 $\mu\mu$F. From these, by multiplying by *m* and *n* as directed in the table, we find L_1 = 150 mH., L_2 = 12.5 mH., C_2 = 167 $\mu\mu$F., and C_1 = 13.9 $\mu\mu$F. This last, the capacity in parallel with L_1, is uncomfortably low; it will have to be obtained in practice by measuring the self-capacity of the coil and then twisting together the tailing-off wires sufficiently to add the few remaining micro-microfarads necessary to make up the required value. The final circuit is shown in Fig. 12.

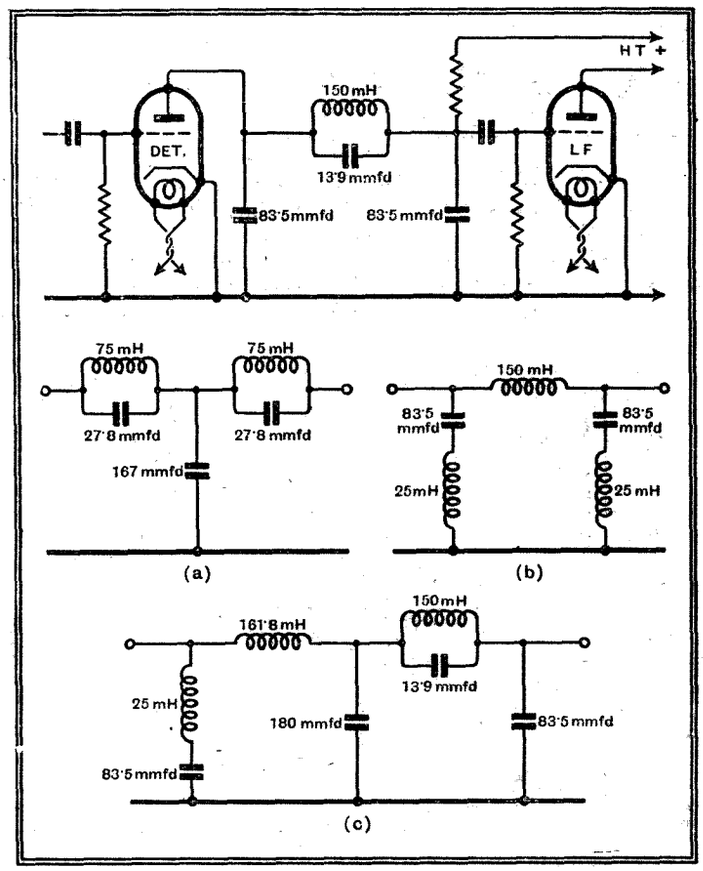

Fig. 12.—Use of an *m*-derived filter for following the detector of a superhet; $f\infty$ is the intermediate frequency, *a*, *b*, and *c* are alternative forms, good and bad, discussed in the text.

A single cell only is used, because the full theoretical attenuation should be realised if C_1 is correctly adjusted. As already pointed out, the input-impedance of this filter is the same as that of a π-terminated prototype, but as we are not interested in currents round about f_c (55 kc/s) lack of impedance-regulation will do no harm. If we had wanted to use the *m*-cell for impedance-regulation, the usual reason for its choice, the two half-cells would have had to be separated and re-connected back to back, as in Fig. 12*a*. But this would give high input impedance at 110 kc/s, and so is inadmissible as giving rise to feed-back through the valve. The *m*-terminated T-cell at *b*, though beginning well with an acceptor circuit from anode to cathode, would fail to give the full calculated attenuation owing to the self-capacity across L_1; moreover, it needs three coils to make a single cell. For the same expenditure of wire we could make a really good two-cell filter combining a parallel acceptor to ensure low 110-kc/s voltage on the anode of the valve and a series rejector, as in our first cell, to avoid the effect of coil capacity. The recipe is 8 – 5 – 3 – 4 (Fig. 5), and although 5 would be rather a passenger, the whole, shown at 12*c*, would be extremely effective.

Part IV will deal with the practical design of composite filters.

POLITICAL BROADCASTS

IT is rather interesting to notice how much time some of the foreign stations devote to reports of our parliamentary debates when the House of Commons is sitting. Paris P.T.T., for instance, often gives a much more detailed account of the proceedings in Parliament than we have in our own second news bulletins. The Ullswater Report recommended that the doings of Parliament should occupy a prominent place in the news bulletins, but the average listener probably would not want to hear more about them than he does at present, unless, of course, some particularly momentous debate is in progress. But on the Continent the man in the street is probably a good deal more politically minded than he is in this country. There is no doubt that he takes a very keen interest in his own politics and those of other countries as well in so far as they are likely to affect him.

Readers' Problems

THESE columns are reserved for the publication of matter of general interest arising out of problems submitted by our readers.
Readers requiring an individual reply to their technical questions by post are referred to "The Wireless World" Information Bureau, of which brief particulars, with the fee charged, are to be found at the foot of this page.

Mixing Mains and Batteries

IT is asked whether it would be possible, as a temporary measure, to link the output of a grid detector valve (battery fed) to a high-quality AC amplifier through a resistance coupling. The writer of this query seems to be in doubt as to how the first valve in the amplifier would obtain its bias.

Although one's natural instinct is to provide complete isolation between the battery set and the mains-driven amplifier by fitting a transformer, there is no real reason why resistance coupling should not be employed. As will be seen from Fig. 1, which shows the appropriate inter-connections, the first amplifying valve will in any case receive its grid bias through the leak resistance associated with resistance coupling, even if no conductive path (such as a volume control) exists between the "A" and "B" terminals.

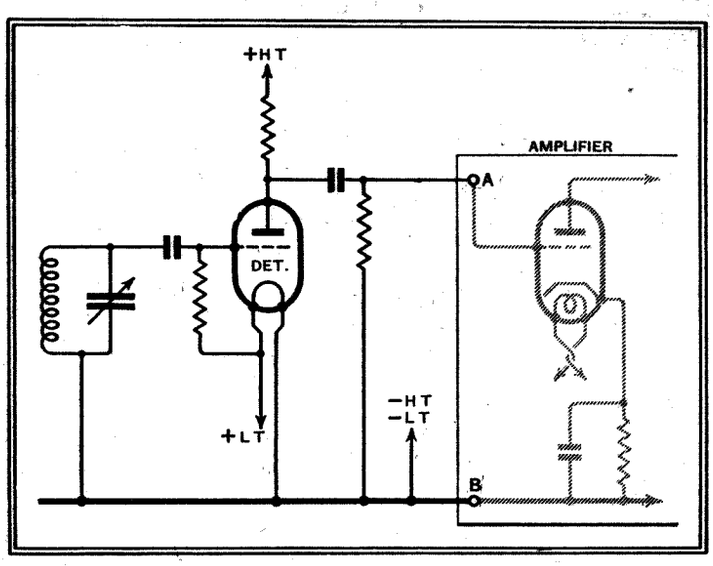

Fig. 1.—The output from the detector stage of a battery receiver can be resistance-coupled to a mains-driven amplifier by means of this circuit.

Switching Affects Medium Waves Only

IN perhaps as many as nine cases out of ten a defect in the waverange switching system of the ordinary 2-band receiver manifests itself only on the medium waves. This is because the great majority of switches operate by short-circuiting the long-wave coils, and any fault the switch contacts may develop is likely to be in the way of failing to close properly rather than in failing to open.

This matter is brought up by a correspondent who—we think wrongly—ascribes the poor and erratic quality of his set on the long waves to a defective switch. It is much more likely to be a defective coil.

Leave the LT "On"

WHEN carrying out tests or adjustments of a battery receiver there is a natural tendency to switch off the LT battery. That this inclination is one that should be resisted is brought home by a letter from a reader who accidentally applied full HT voltage to the positive filament bus-bar of his set. There was a flash, but, to his surprise, all the valves seem to be in perfect condition.

We expect that the LT battery was connected across the filaments at the time and that it acted in the usual way as an automatic safeguard by preventing the development of a high voltage across the terminals.

Whistle Suppressor Losses

A READER who is using a conventional type of wave-trap (Fig. 2*a*) finds that it is completely effective in reducing interference due to the local station, but that reception of distant transmissions on adjacent channels is impaired.

Up to a point, these losses are inevitable, but it is quite possible that they might be reduced without sensibly impairing the efficacy of the wave-trap by tapping-down the aerial connection in the manner indicated in Fig 2*b*. At any rate, the experiment is worth trying; the connection should be moved down just far enough to retain sufficient suppression of the whistles. Again, it may be borne in mind that a wave-trap of abnormally high efficiency with a large air-cored coil, or a good iron-cored coil, will permit of better suppression combined with less detrimental effect on reception in neighbouring channels.

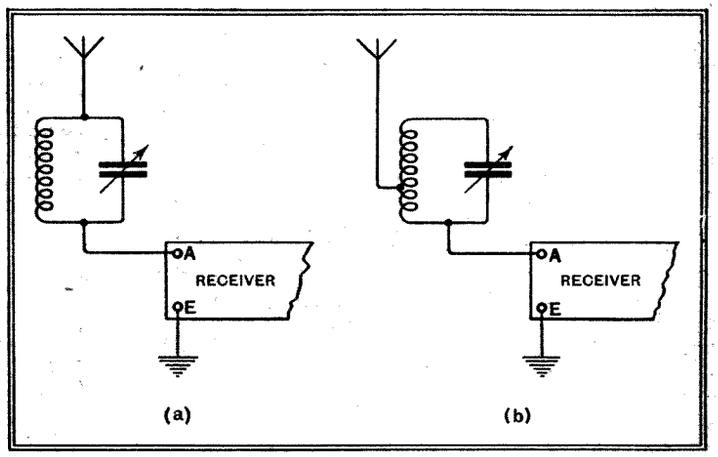

Fig. 2.—A case for compromise: method (a) of connecting a whistle-suppressor wave-trap provides best suppression, but method (b) has less effect on reception in adjacent channels.

"Breaking Down" Mains Voltage

THE owner of an American set rated to work on 110-volt mains asks whether it would be safe to operate it on a 200-volt DC supply by interposing a resistance.

This is a practicable scheme; the value of the breaking-down resistance can be ascertained by dividing 90 (difference between rated voltage and supply voltage) by the current (in amperes) consumed by the set.

The trouble in working a receiver with parallel-connected valves from a high-voltage source through the intermediary of an absorbing resistance is that if one of the valves breaks down the voltage-dropping effect of the resistance will be reduced and conceivably the remaining valves may be damaged or burnt out. However, the valves in our querist's set are probably series-connected, and so this danger will not arise.

When AVC Is Not Worth While

FEW will quarrel with the dictum that the addition of AVC to a comparatively simple 1-HF or 2-HF battery-fed set is not worth while. In such cases quite an elaborate control system is necessary, because amplified AVC is almost essential and the extra controlling valve must have a separate source of current supply.

The owner of a 1-HF set who writes on this subject is therefore advised that the results obtained would hardly justify the expense and complexity of the AVC apparatus that would be necessary.

"Without a Power Transformer"

REFERRING to a published "Reader's Problem" in our issue of May 29th, a correspondent asks whether, in a case where a rectified voltage no greater than that of the mains supply is needed, it would be permissible to use a half-wave metal rectifier.

This plan is not only permissible, it is the one customarily recommended, and is employed in many "universal" receiver circuits. The voltage-doubling circuit as published obviously calls for exceptional care in its use, as if its output were connected to an earthed receiver one-half of the rectifier would be virtually short-circuited.

The Wireless World

INFORMATION BUREAU

THE service is intended primarily for readers meeting with difficulties in connection with receivers described in *The Wireless World*, or those of commercial design which from time to time are reviewed in the pages of *The Wireless World*. Every endeavour will be made to deal with queries on all wireless matters, provided that they are of such a nature that they can be dealt with satisfactorily in a letter.

Communications should be by letter to *The Wireless World* Information Bureau, Dorset House, Stamford Street, London, S.E.1, and must be accompanied by a remittance of 5s. to cover the cost of the service.

Personal interviews are not given by the technical staff, nor can technical enquiries be dealt with by telephone.

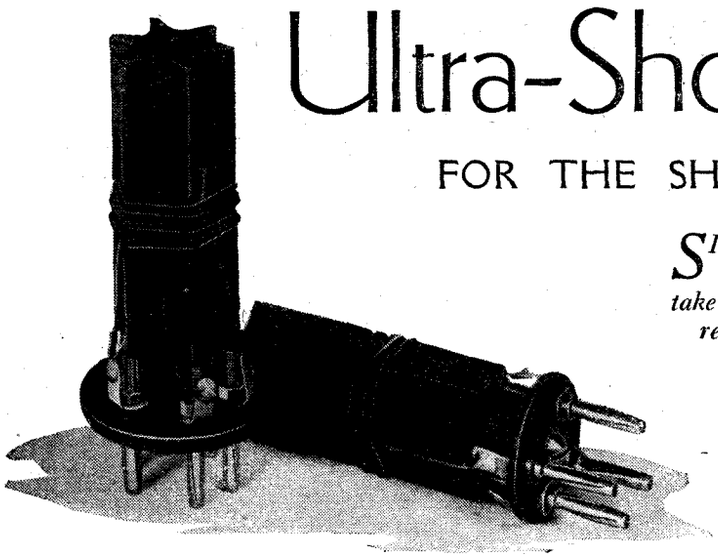

Ultra-Short-Wave Coils

FOR THE SHORT-WAVE BATTERY FOUR

SINCE many experimenters are keenly interested in the ultra-short-waves it was decided when designing this receiver to take in a useful part of the band. Special coils, however, are required and their construction is described in this instalment.

By H. B. DENT

Constructional Details and Winding Data

IN last week's issue mention was made of a set of coils that had been made specially for the short-wave receiver to extend its range into the ultra-short-wave region. The object was to bring in the ten-metre amateur band and tune down to at least eight metres, as on occasions some very interesting telephony signals have been heard in this country —some originating from American police cars working between eight and nine metres.

Though these signals are not very strong and, so far, have been received mainly on superheterodynes, there is no reason why they should not be receivable on a straight set when conditions are favourable.

It is anticipated that a little later on in the year there will be considerably more amateur activity in the ten-metre band, so that an experimenter's set designed to meet the requirements of the immediate future must obviously cover these lower wavelengths.

After allowing a safe overlap on the smallest B.T.S. coil used, it was found possible to provide a tuning range of 7.4 to 12.5 metres. It is doubtful if this will take in the sound transmitter of the forthcoming ultra-short-wave television service, but it might be possible, when the wavelength is definitely known, to make some coils for receiving it, though this receiver is, of course, quite unsuitable for the accompanying vision transmissions.

Winding Details

The ultra-short-wave coils—two are required, one a four-pin and the other a six-pin type—are wound on short lengths of Becol No. 2 six-rib ebonite former. They measure one inch across the ribs, and have a ⅛in. hole down the centre. The two formers are cut to the sizes shown in the drawings, and a part reduced where they are fixed to the base piece carrying the pins.

Both coils have the same number of windings as the B.T.S. models, and, of course, the pin connections are identical. The aerial coil is quite straightforward, as it has only two windings, the aerial turns being located in the spaces between the grid winding. They both have 2½ turns, the half-turn being obtained by passing the wire through a hole in the former and bringing it down to its pin. In the drawing the top, not the underside, of the base is shown.

The first procedure is to prepare the formers, and cut shallow slots ⅛in. apart in the ribs for both aerial and grid windings. For the former No. 36 SWG DSC wire is used, but the grid winding requires a heavy gauge of wire and No. 18 SWG enamel is recommended.

The HF coil is a little more complicated as it carries three separate windings, and it was also necessary to arrange for all three to be coupled as tightly as possible. This is achieved by placing the primary winding immediately below the secondary and actually in the same "V"-shaped slots, but this winding is spaced slightly by making a shallow cut with a very thin saw in the bottom of the slots.

This allows the thin primary wire to settle down in the slots, but the thick secondary wire remains on top.

Of the three drawings, the centre and right-hand ones relate to this coil. The first operation—that is, winding the primary, is explained by the centre drawing, while in the other the secondary and reaction windings are shown in position.

As in the case of the aerial coils, all windings on the HF former have 2½ turns, the half turn being obtained, as already mentioned, by threading the wire through holes and bringing them out on the opposite side, then down to their respective pins.

Tuning Range

A calibration curve has not been given for this range, as there might be some discrepancies in different coils, but the table

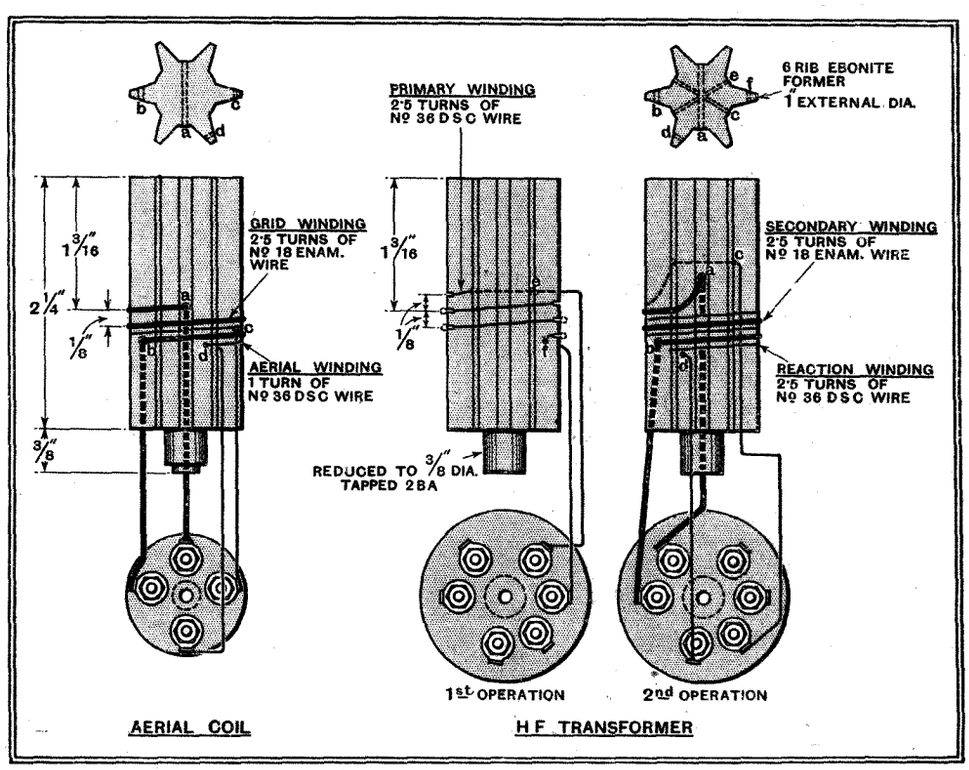

Constructional data for the two ultra-short-wave coils. Note that the top and not the underside of the base piece is shown in the drawings.

Ultra-Short-Wave Coils—

showing the wavelength of the original pair at every tenth division mark on the dial may prove of some assistance, and at least act as a rough guide at the outset.

Condenser Scale.	Wavelength in Metres.
0	7.31
10	7.55
20	7.97
30	8.47
40	9.06
50	9.65
60	10.21
70	10.8
80	11.38
90	11.96
100	12.55

For the construction of these coils a six-inch length of Becol No. 2 size former is required, together with a small piece of $\frac{1}{8}$in. thick ebonite for the base pieces, and ten Clix No. 18 coil pins. Small quantities of No. 18 SWG enamel and No. 36 DSC wire are also needed.

It should be noted that the lower ends of the formers are tapped 2BA to take a screw for securing the pin bases.

Possibly it will be of interest to constructors of the set to learn that British Television Supplies, Ltd., have undertaken to make these coils, and supplies should be available by the time this appears in print.

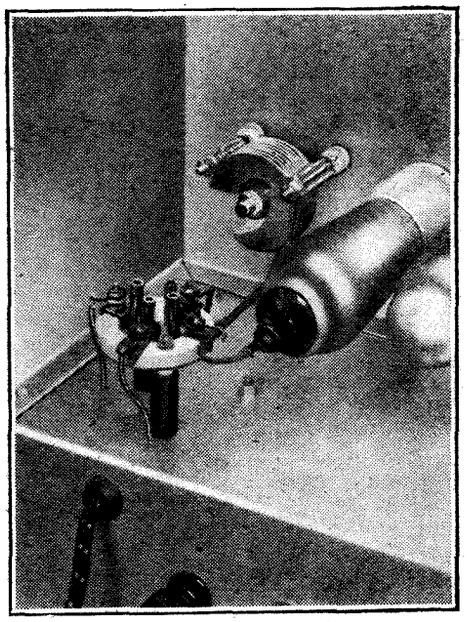

Long leads must be avoided in a set of this type; here is shown the method of mounting the coil base, condenser and HF valve.

RANDOM RADIATIONS

By "DIALLIST"

Nature's Broadcasting

WE have certainly had our share of thunderstorms recently. In my locality there were four consecutive days of them, a thing that I can't remember happening before. It was an extraordinary period, for during the whole of it one storm followed closely on the heels of another; in fact, I don't think we had more than six or seven consecutive hours in which lightning was not visible or thunder audible. In the circumstances, one couldn't do much in the way of listening to wireless programmes, for the aerial had to be kept earthed most of the time. The B.B.C. transmitters carried on gallantly, and some of them must have had rather nerve-shattering experiences. The big storm which did so much damage at St. Albans apparently passed right over Brookman's Park, only a few miles away, and it is surprising that the only interruption in the programmes from its twin stations occurred on the Sunday evening, when the London Regional was out of action for thirty-seven minutes. Reports in the newspapers spoke of the aerial having been struck, but it could hardly have been a direct hit or much more than thirty-seven minutes would have been needed for repairs!

Atmospheric Oddities

Have you, I wonder, noticed that you don't always find very violent atmospheric interference when a storm is raging at no great distance from you? An incident occurred on Saturday, June 20th, when there was an item that I particularly wanted to hear. Just before it was due to start a big storm came up, so, deeming discretion the better part of valour, I left the big aerial earthed and switched on a portable receiver. This storm did not pass directly overhead, though the brief time-intervals between lightning flashes and thunderclaps showed that it was very close. Yet at no time were atmospherics bad enough to ruin the reception or to make speech inaudible—the item in question was a talk. The storm was travelling rapidly away, and after about ten minutes I went over to the big aerial with its associated superhet. Again there *were* atmospherics, but I can't say that they were very troublesome. I have noticed the same thing on many previous occasions. Once, in particular, a thunderstorm that did extensive damage in a town about a dozen miles away produced no interference worth talking about with my reception. Since thunderstorms can and do produce atmospheric interference at ranges of thousands of miles, is it possible that there is, at times at any rate, something like a skip area for atmospherics?

The Junk Box

EVERY old hand at wireless must have a junk box—or, more probably, several of them, plus a cupboard or two. The average junk box contains a rare collection of ancient and modern components, most of them kept because their owner can't bring himself to discard anything in case it might come in useful some time—or, rather, he couldn't do so at the time when he was consigning this bit or that piece to his odd-spare-parts container. If you burrow deep enough in some of them you are liable to come across such curiosities as filament rheostats, variable-resistance grid-leaks and coil holders built to take a trio of honeycomb inductances, one fixed and two swinging. It is rather sad to turn over such a pile of wireless gear whilst meditating upon the pounds and pounds' worth of stuff that it represented originally and the complete worthlessness of most of it to-day.

Cleaning Up

Myself, I make a point of going through my old stock of wireless parts about once a year and weeding out as much as possible of it. There are several ways in which wireless junk, so long as it consists of components in reasonable working order, can be got rid of with advantage, not only to oneself (in that storage space is saved), but also to others. If your local Boy Scouts have not a wireless section they will doubtless number a good many individual enthusiasts who cannot afford to buy the ingredients of even the simplest set for themselves. A word to the Scoutmaster ensures the arrival of the patrol cart, and your discards are received with real gratitude. Next there are jumble sales in aid of deserving local causes. They are always glad to have the wireless parts that you don't want. And then there are the keen schoolboy enthusiasts who are dying to make something new in receiving sets but haven't the pocket money to buy all that they want. One such came round to my den the other day by invitation. A simple short-wave set was his ambition; assets, just about enough to buy the batteries. I was able to fit him out with everything but the coils, which he can easily wind for himself. And I am sure that I shall get a great deal of pleasure out of his enthusiasm when he asks me to come and hear that set working, as he will any day now. Don't let your junk moulder. Get rid of it whilst it is still of use to somebody.

Screening and Interference

A GREAT deal is being made nowadays of the advantages of the anti-interference type of aerial. It certainly is exceedingly effective if given a fair chance, but it can't do very much if the receiving set with which it is used is so ineffectively screened that direct pick-up of interference occurs. It is no uncommon experience to find that a receiving set of the more moderately priced kind will bring in the local stations at a range of fifteen miles or more even when both aerial and earthing connections are entirely removed. The question of screening is, I think, one that should receive a good deal more attention nowadays. It is certainly pretty closely attended to in some of the big American sets. I was using one of these the other day in a house rather more than a dozen miles from Brookman's Park, and, despite its sixteen valves, it would have nothing to do with either London Regional or London National when aerial and earth leads were disconnected. Used under the same conditions, and in the same house, a three-valve British superhet could be made to bring in either station at considerable volume. It was interesting to notice that certain man-made interference which was strongly brought out by the smaller set with the aerial in use was hardly audible from the bigger one with its more effective screening.

BROADCAST BREVITIES

News from Portland Place

"D.G." May Move House

FOR a long time past Sir John Reith has found the journey between Broadcasting House and his home at Beaconsfield increasingly trying. It is not as if the Director General of British Broadcasting observed reasonable working hours. While he is to be seen crossing the entrance hall in Portland Place at half-past nine on the dot every morning without fail, he is only restricted in the hour of leaving by the exigencies of his work.

In times of emergency he does not return home but puts up for the night at the adjacent Langham Hotel.

Fifty Miles a Day

Possessed though he is of enormous staying power, the "D.G." is not getting younger, and a 50-mile journey added to the stress and strain of the day at Broadcasting House is bound to take its toll when repeated week after week and month after month; thus he is beginning to think seriously of vacating his dower farm habitation in Buckinghamshire for a house nearer London.

And a Lake

It is understood that he is turning his attention to a certain town famous for its public school where he has the opportunity of acquiring the delectable residence—to say nothing of the magnificent lake in the grounds—at present occupied by the widow of a well-remembered author. It is said that this lady has expressed her determination to have her beautiful mansion razed to the ground rather than let it come into the possession of any unacceptable person. In Sir John Reith she would find the type of owner to whom she could take no exception.

Re-enter, Sir Henry

THE unflagging Sir Henry Wood takes charge of the "Proms" once more, mounting the rostrum for his 42nd annual season on Saturday, August 8. The occasion is something of an anniversary for the B.B.C., this being the tenth season under the Corporation's auspices.

Perhaps this is the reason for the inclusion in the programmes of an uncommon amount of British music, much of it conducted by the composers in person.

Air-raid Music

These distinguished guests include William Walton, conducting his "Portsmouth Point" and First Symphony (August 11th); John Greenwood, "Salute to Gustav Holst" (August 13th); Eric Fogg, Bassoon Concerto (August 18th); Arthur Bliss, Film Music for H. G. Wells' "Things to Come" (September 26th); Ian Whyte, Three Scottish Dances (August 31st); Constant Lambert, Scherzo "King Pest" (September 5th); Sir Granville Bantock, Comedy Overture, "The Frogs" (September 9th); and Frank Bridge, Two Poems after Richard Jefferies (September 18th).

The film music by Arthur Bliss includes representations of air raids, bombardments, and other incidents of war.

Female Voices and the Loud Speaker

A first performance in England of a Concerto for Saxophone and Orchestra is among the foreign novelties, to be heard on September 12th. The composer is Jacques Ibert. Another first performance in this country will be that of "Tableaux Grecs" by Armand Marsick, to be broadcast on September 29th.

For listeners whose loud speakers deal kindly with women's singing there may be treats in store, for the "Proms" programmes include Debussy's rarely heard Nocturne "Sirènes," with chorus for female voices, and Brahms' "Four Songs for Female Chorus."

Saturation Point

WHEN broadcasting was still young (it began to get old—stereotyped—after the first five years or thereabouts) the B.B.C. and the Post Office used to talk of saturation point in terms of 4,000,000 licences. Nowadays, with 7,671,770 licences in force, the accountancy experts are revising their opinions and placing the estimated saturation point at ten millions. They seem to have sane enough grounds for optimism, as the figures go on mounting merrily higher. At the end of May last the number of new paid licences showed an increase of 28,848 over the April figure.

A Consistent Increase

In May, 1935, Silver Jubilee year, the increase was 36,907 over the preceding month, and in May, 1934, it was 28,487 more than in April of the same year. The best May increase over April recorded since the formation of the Corporation was in 1931, when the figure was 48,056. In the last year of the old British Broadcasting Company, 1926, the May increase was 37,491 over April, thus showing a remarkable consistency for this time of year over a long period.

Au Revoir to the Abbey

SINCE the organ of Westminster Abbey was dismantled the vast body of wireless worshippers have missed the noble playing at Thursday evensong of Dr. Ernest Bullock. Later, when the building is closed entirely for the structural modifications necessitated by the preparations for next year's Coronation, the transmissions from the Abbey would have to cease in any case.

Until the Coronation

Events are therefore only being anticipated by the arrangements which are now in hand for transferring the week-day Evensong broadcasts to St. Paul's Cathedral. It is probable that these will take place on Wednesdays, not Thursdays, and will be timed an hour later than the Abbey broadcasts, i.e., 4.0-4.50 p.m. It is felt that hundreds of thousands of listeners, both at home and abroad, and throughout the Empire, will extend a warm welcome to these transmissions from London's great cathedral church, and will be no less responsive to the return to the Abbey church next May.

The organ at St. Paul's will be heard when the mid-week Evensong is broadcast from the Cathedral.

Gymnastics at Alexandra Palace

WITHIN the next fortnight the aerial arrays, both for sound and vision, should be *in situ* at the top of the 220ft. mast which surmounts the S.E. tower of Alexandra Palace. This does not necessarily mean that they will be immediately ready for transmission, since the task of tuning and matching the aerials is no easy one.

The mere business of mounting the supports has provided a first-class gymnastic display for the lucky hundreds of onlookers who can apparently afford the time to gaze upwards in wonder and admiration on any old week-day.

Television Teas

Sunday is Public Viewing Day No. 1. Being such a colossal and awe-inspiring landmark, the mast is drawing hikers and motorists from miles around. They congregate on the terrace, inside the little "bier-garten" in the grounds, and beside the artificial lake . . . and gaze. Picnic parties under the elms enjoy, or appear to enjoy, television teas, and a good time is had by all till long after sunset, when the red beacon light—a warning to aircraft—shines forth from the mast top.

By the way, it is reported that the red light has been seen as far away as Dulwich.

No Lift . . . But a Noble Staircase

The main entrance to the B.B.C. wing of the Palace is now embellished with copper-coloured swing doors opening into a spacious reception hall modelled on Broadcasting House lines. The visitor will find that the resemblance ends when he wishes to ascend to the offices, for where the lift should be there is no lift. By way of compensation, however, he will be confronted with a nobly proportioned staircase, with banisters in bright red Colonial wood down which one could slide with a minimum of inconvenience save at the corners.

PRINCIPAL BROADCASTING STATIONS OF EUROPE

Arranged in Order of Frequency and Wavelength

(This list is included in the first issue of each month. Stations with an Aerial Power of 50 kW. and above in heavy type)

Station.	kc/s.	Tuning Positions.	Metres.	kW.
Ankara (Turkey)	153		1961	5
Kaunas (Lithuania)	155		1935	7
Brasov (Romania)	160		1875	150
Hilversum No. 1 (Holland) (10 *kW.* till 2.40 p.m. G.M.T.)	160		1875	100
Lahti (Finland)	166		1807	150
Moscow, No. 1, RW1 (Komintern) (U.S.S.R.)	172		1744	500
Paris (Radio Paris) (France)	182		1648	80
Istanbul (Turkey)	185		1622	3
Deutschlandsender (Germany)	191		1571	60
Droitwich	200		1500	150
Irkutsk (U.S.S.R.)	200		1500	35
Minsk, RW10 (U.S.S.R.)	208		1442	35
Reykjavik (Iceland)	208		1442	16
Motala (Sweden)	216		1389	150
Novosibirsk, RW76 (U.S.S.R.)	217.5		1379	100
Warsaw, No. 1 (Poland)	224		1339	120
Luxembourg	232		1293	150
Kharkov, RW20 (U.S.S.R.)	232		1293	20
Kalundborg (Denmark)	240		1250	60
Vienna, No. 2 (Austria)	240		1250	0.5
Leningrad, RW53 (Kolpino) (U.S.S.R.)	245		1224	100
Tromsö (Norway)	253		1186	0.1
Tashkent, RW11 (U.S.S.R.)	256.4		1170	25
Oslo (Norway)	260		1153.8	60
Moscow, No. 2, RW49 (Stchelkovo) (U.S.S.R.)	271		1107	100
Tiflis, RW7 (U.S.S.R.)	280		1071.4	35
Finmark (Norway)	355		845.1	10
Rostov-on-Don, RW12 (U.S.S.R.)	355		845.1	20
Budapest, No. 2 (Hungary)	359.5		834.5	20
Sverdlovsk, RW5 (U.S.S.R.)	375		800	50
Boden (Sweden)	392		765	0.6
Banska-Bystrica (Czechoslovakia)	392		765	100
Geneva (Switzerland)	401		748	1.3
Moscow, No. 3 (RCZ) (U.S.S.R.)	401		748	100
Ostersund (Sweden)	413.5		726	0.6
Voroneje, RW25 (U.S.S.R.)	413.5		726	10
Oulu (Finland)	431		696	1.2
Ufa, RW22 (U.S.S.R.)	436		688	10
Tartu (Estonia)	517		580	0.5
Hamar (Norway)	519		578	0.7
Innsbruck (Austria)	519		578	1
Ljubljana (Yugoslavia)	527		569.3	5
Viipuri (Finland)	527		569.3	10
Bolzano (Italy)	536		559.7	20
Wilno (Poland)	536		559.7	16
Budapest, No. 1 (Hungary)	546		549.5	120
Beromünster (Switzerland)	556		539.6	100
Athlone (Irish Free State)	565		531	60
Palermo (Italy)	565		531	4
Stuttgart (Germany)	574		522.6	100
Alpes-Grenoble, P.T.T. (France)	583		514.6	15
Riga (Latvia)	583		514.6	15
Vienna (Austria)	592		506.8	100
Rabat (Morocco)	601		499.2	30
Sundsvall (Sweden)	601		499.2	10
Florence (Italy)	610		491.8	20
Cairo, No. 1 (Egypt)	620		483.9	20
Brussels, No. 1 (Belgium)	620		483.9	15
Lisbon (Portugal)	629		476.9	20
Tröndelag (Norway)	629		476.9	20
Prague, No. 1 (Czechoslovakia)	638		470.2	120
Lyons, P.T.T. (France)	648		463	100
Petrozavodsk (U.S.S.R.)	648		463	10
Cologne (Germany)	658		455.9	100
North Regional (Slaithwaite)	668		449.1	70
Sottens (Switzerland)	677		443.1	100
Belgrade (Yugoslavia)	686		437.3	2.5
Bodö (Norway)	686		437.3	0.5
Paris, P.T.T. (France)	695		431.7	120
Stockholm (Sweden)	704		426.1	55
Rome, No. 1 (Italy)	713		420.8	50
Kiev, RW9 (U.S.S.R.)	722		415.5	36
Tallinn (Estonia)	731		410.4	20
Madrid, EAJ2 (Spain)	731		410.4	3
Seville (Spain)	731		410.4	5.5
Munich (Germany)	740		405.4	100
Marseilles, P.T.T. (France)	749		400.5	120
Pori (Finland)	749		400.5	1
Sortavala (Finland)	749		400.5	0.2
Katowice (Poland)	758		395.8	12
Scottish Regional (Falkirk)	767		391.1	50
Stalino (U.S.S.R.)	776		386.6	10
Toulouse, P.T.T. (France)	776		386.6	1
Fredrikstad (Norway)	776		386.6	1
Leipzig (Germany)	785		382.2	120
Barcelona, EAJ1 (Spain)	795		377.4	7.5
Lwow (Poland)	795		377.4	16
West Regional (Washford Cross)	804		373.1	70
Milan, No. 1 (Italy)	814		368.6	50
Bucharest (Romania)	823		364.5	12
Moscow, No. 4, RW39 (Stalina) (U.S.S.R.)	832		360.6	100
Agen (France)	832		360.6	0.5
Berlin (Germany)	841		356.7	100
Norwegian Relay Stations	850		352.9	—
Sofia (Bulgaria)	850		352.9	1
Valencia (Spain)	850		352.9	3
Simferopol, RW52 (U.S.S.R.)	859		349.2	10
Strasbourg (France)	859		349.2	40
Poznan (Poland)	868		345.6	16
London Regional (Brookmans Park)	877		342.1	50
Linz (Austria)	886		338.6	15
Graz (Austria)	886		338.6	7
Helsinki (Finland)	895		335.2	10
Limoges, P.T.T. (France)	895		335.2	1.5
Hamburg (Germany)	904		331.9	100
Dniepropetrovsk (U.S.S.R.)	913		328.6	10
Toulouse (Radio Toulouse) (France)	913		328.6	60
Brno (Czechoslovakia)	922		325.4	32
Brussels, No. 2 (Belgium)	932		321.9	15
Algiers (Algeria)	941		318.8	12
Göteborg (Sweden)	941		318.8	10
Breslau (Germany)	950		315.8	100
Paris (Poste Parisien) (France)	959		312.8	60
Bordeaux-Sud-Ouest (France)	968		309.9	2.5
Odessa (U.S.S.R.)	968		309.9	10
Northern Ireland Regional (Lisburn)	977		307.1	100
Genoa (Italy)	986		304.3	10
Torun (Poland)	986		304.3	24
Hilversum No. 2 (Holland). (15 *kW.* till 2.40 p.m. G.M.T.)	995		301.5	60
Bratislava (Czechoslovakia)	1004		298.8	13.5
Midland Regional (Droitwich)	1013		296.2	70
Chernigov (U.S.S.R.)	1013		296.2	5
Barcelona, EAJ15 (Spain)	1022		293.5	3
Cracow (Poland)	1022		293.5	2
Oviedo (Spain)	1022		293.5	0.7
Königsberg No. 1 (Heilsberg) (Germany)	1031		291	100
Parede (Portugal)	1031		291	5
Leningrad, No. 2, RW70 (U.S.S.R.)	1040		288.5	10
Rennes-Bretagne (France)	1040		288.5	40
Scottish National (Falkirk)	1050		285.7	50
Bari No. 1 (Italy)	1059		283.3	20
Paris (Radio Cité) (France)	1068		280.9	0.8
Tiraspol, RW57 (U.S.S.R.)	1068		280.9	4
Bordeaux-Lafayette (France)	1077		278.6	25
Zagreb (Yugoslavia)	1086		276.2	0.7
Falun (Sweden)	1086		276.2	2
Madrid, EAJ7 (Spain)	1095		274	10
Vinnitsa (U.S.S.R.)	1095		274	10
Madona (Latvia)	1104		271.7	50
Naples (Italy)	1104		271.7	1.5
Moravska-Ostrava (Czechoslovakia)	1113		269.5	11.2
Fécamp (Radio Normandie) (France)	1113		269.5	15
Alexandria, No. 1 (Egypt)	1122		267.4	0.25
Newcastle	1122		267.4	1
Nyiregyhaza (Hungary)	1122		267.4	6.2
Hörby (Sweden)	1131		265.3	10
Turin, No. 1 (Italy)	1140		263.2	7
Trieste (Italy)	1140		263.2	10
London National (Brookmans Park)	1149		261.1	20
North National (Slaithwaite)	1149		261.1	20
West National (Washford Cross)	1149		261.1	20
Kosice (Czechoslovakia)	1158		259.1	2.6
Monte Ceneri (Switzerland)	1167		257.1	15
Copenhagen (Denmark)	1176		255.1	10
Kharkov, No. 2, RW4 (U.S.S.R.)	1185		253.2	10
Nice Corse (France)	1185		253.2	60
Frankfurt (*and Relays*) (Germany)	1195		251	25
Prague, No. 2 (Czechoslovakia)	1204		249.2	5
Lille, P.T.T. (France)	1213		247.3	60
Bologna (Radio Marconi) (Italy)	1222		245.4	50
Narvik (Norway)	1222		245.4	0.3
Gleiwitz (Germany)	1231		243.7	5
Cork (Irish Free State)	1240		241.9	1
Saarbrücken (Germany)	1249		240.2	17
Kuldiga (Latvia)	1258		238.5	10
Rome, No. 3 (Italy)	1258		238.5	1
San Sebastian, EAJ8 (Spain)	1258		238.5	1
Nürnberg (Germany)	1267		236.8	2
Juan-les-Pins (Radio Côte d'Azur) (France)	1276		235.1	0.8
Christiansand (Norway)	1276		235.1	0.5
Stavangar (Norway)	1276		235.1	0.5
Dresden (Germany)	1285		233.5	0.25
Aberdeen	1285		233.5	1
Klagenfurt (Austria)	1294		231.8	4.2
Vorarlberg (Austria)	1294		231.8	6
Danzig	1303		230.2	0.5
Swedish Relay Stations	1312		228.7	—
Magyarovar (Hungary)	1321		227.1	1.25

Station.	kc/s.	Tuning Positions.	Metres.	kW.
German Relay Stations	1330		225.6	—
Montpellier, P.T.T. (France)	1339		224	0.8
Lodz (Poland)	1339		224	2
Dublin (Irish Free State)	1348		222.6	0.5
Rjukan (Norway)	1348		222.6	0.15
Salzburg (Austria)	1348		222.6	0.5
Cairo No. 2 (Egypt)	1348		222.6	0.5
Königsberg (Germany)	1348		222.6	2
Nottoden (Norway)	1348		222.6	0.15
Italian Relay Stations	1357		221.1	—
L'Ile de France (France)	1366		219.6	0.7
Basle (Switzerland)	1375		218.2	0.5
Berne (Switzerland)	1375		218.2	0.5
Warsaw, No. 2 (Poland)	1384		216.8	2
Lyons (Radio Lyons) (France)	1393		215.4	25
Tampere (Finland)	1420		211.3	0.7
Beziers (Radio Midi) (France)	1429		209.9	0.3
Alexandria, No. 2 (Egypt)	1429		209.9	0.5
Turku (Finland)	1429		209.9	0.5
Miskolc (Hungary)	1438		208.6	1.25
Paris (Eiffel Tower) (France)	1456		206	5
Pecs (Hungary)	1465		204.8	1.25
Antwerp (Belgium)	1465		204.8	0.1
Courtrai (Belgium)	1465		204.8	0.1
Bournemouth	1474		203.5	1
Plymouth	1474		203.5	0.3
Binche (Belgium)	1487		201.7	0.1
Chatelineau (Belgium)	1492		201.1	0.1
Wallonia (Belgium)	1492		201.1	0.1
Nimes (France)	1492		201.1	0.7
Albacete (Spain)	1492		201.1	0.2
Radio Alcoy (Spain)	1492		201.1	0.1
Santiago (Spain)	1492		201.1	0.5
Liege (Radio Cointe) (Belgium)	1500		200	0.1
Verviers (Belgium)	1500		200	0.1
Pietarsaari (Finland)	1500		200	0.5
Radio Alcalá (Spain)	1500		200	0.2
Karlskrona (Sweden)	1530		196	0.2
Liepàja (Latvia)	1737		173	0.1

SHORT-WAVE STATIONS OF THE WORLD

Station.	Call Sign.	kc/s.	Tuning Positions.	Metres.	kW.
Ponta Delgada (Azores)	CT2AJ	4,000		75.00	0.05
Kharbarovsk (Russia)	RV15	4,273		70.20	20
Sourabaya (Java)	YDB	4,470		67.11	1
Caracas (Venezuela)	YV2RC	5,800		51.72	1
San Jose (Costa Rica)	TIX	5,820		51.52	1
Maracaibo (Venezuela)	YV5RMO	5,850		51.28	1
Vatican City (Vatican State)	HVJ	5,969		50.26	10
Trujillo (Domenica)	HIX	5,980		50.16	0.2
Mexico City (Mexico)	XEBT	6,000		50.00	1
Moscow (Russia)	RW59	6,000		50.00	20
Drummondville (Canada)	**CFCF**	**6,005**		**49.96**	**50**
Havana (Cuba)	COCO	6,010		49.92	0.5
Singapore (Malaya)	ZH1	6,018		49.85	0.09
Bogota (Colombia)	HJ3ABH	6,018		49.85	1.6
Zeesen (Germany)	DJC	6,020		49.83	5
Panama City (Panama)	HP5B	6,030		49.75	0.1
Calgary (Canada)	VE9CA	6,030		49.75	0.1
Boston (U.S.A.)	W1XAL	6,040		49.67	10
Miami (U.S.A.)	W4XB	6,040		49.67	2.5
Pernambuco (Brazil)	PRA8	6,040		49.67	3
Barranquilla (Colombia)	HJ1ABG	6,042		49.65	0.15
Daventry (Gt. Britain)	GSA	6,050		49.59	15
Cincinnati (U.S.A.)	W8XAL	6,060		49.50	10
Philadelphia (U.S.A.)	W3XAU	6,060		49.50	1
Skamlebaek (Denmark)	OXY	6,060		49.50	0.5
Manizales (Colombia)	HJ4ABL	6,067		49.45	0.15
Vienna (Austria)	OER2	6,072		49.41	1.5
Penang (Malaya)	ZHJ	6,080		49.33	0.05
Chicago (U.S.A.)	W9XAA	6,080		49.33	0.5
Nairobi (Kenya)	VQ7LO	6,083		49.31	0.5
Bowmanville (Canada)	CRCX	6,090		49.26	0.5
Johannesburg (South Africa)	ZTJ	6,097		49.20	5
Bound Brook (U.S.A.)	W3XAL	6,100		49.18	35
Chicago (U.S.A.)	W9XF	6,100		49.18	10
Belgrade (Yugoslavia)		6,100		49.18	1
Manizales (Colombia)	HJ4ABB	6,105		49.15	1
Daventry (Gt. Britain)	GSL	6,110		49.10	15
Calcutta (India)	VUC	6,110		49.10	0.5
Medellin (Colombia)	HJ4ABE	6,110		49.10	1
Wayne (U.S.A.)	W2XE	6,120		49.02	1
Havana (Cuba)	COCD	6,130		48.92	0.25
Halifax (Canada)	VE9HX	6,130		48.92	0.07
Pittsburgh (U.S.A.)	W8XK	6,140		48.86	40
Winnipeg (Canada)	CJRO	6,150		48.78	2
Lisbon (Portugal)	CSL	6,150		48.78	0.51
Caracas (Venezuela)	YV3RC	6,150		48.78	1
Parede (Portugal)	CT1GO	6,198		48.40	0.35
Trujillo (Domenica)	HIZ	6,316		47.50	1
Caracas (Venezuela)	YV4RC	6,375		47.05	1
San Jose (Costa Rica)	TIPG	6,400		46.87	0.5
Barranquilla (Colombia)	HJ1ABB	6,447		46.52	1
Cali (Colombia)	HJ5ABD	6,490		46.21	0.1
Valencia (Colombia)	YV6RV	6,520		46.00	0.5
Riobamba (Ecuador)	PRADO	6,620		45.31	1
Guayaquil (Ecuador)	HC2RL	6,667		45.00	0.2
British Amateurs		7,000 to 7,300		42.86 to 41.10	0.01
Georgetown (British Guiana)	VP3MR	7,074		42.40	0.15
Tokio (Japan)	JVP	7,510		39.95	20
Prangins (Radio-Nations) (Switz'l'd)	HBP	7,797		38.48	20
Quito (Ecuador)	HCJB	8,214		36.50	0.25
Hong Kong (China)	ZCK3	8,750		34.29	0.5
Budapest (Hungary)	HAT4	9,125		32.88	5
Havana (Cuba)	COCH	9,428		31.80	1
Rio de Janeiro (Brazil)	PRF5	9,501		31.58	5
Daventry (Gt. Britain)	GSB	9,510		31.55	15
Melbourne (Australia)	VK3ME	9,510		31.55	1.5
Jelöy (Norway)	LKJI	9,530		31.48	1
Schenectady (U.S.A.)	W2XAF	9,530		31.48	25
Zeesen (Germany)	DJN	9,540		31.45	5
Zeesen (Germany)	DJA	9,560		31.38	5
Bombay (India)	VUB	9,565		31.36	4.5
Millis (U.S.A.)	W1XK	9,570		31.35	10
Daventry (Gt. Britain)	GSC	9,580		31.32	15
Lyndhurst (Australia)	VK3LR	9,580		31.32	1
Buenos Aires (Argentina)	LRX	9,580		31.32	5
Philadelphia (U.S.A.)	W3XAU	9,590		31.28	1
Sydney (Australia)	VK2ME	9,590		31.28	20
Eindhoven (Holland)	PCJ	9,590		31.28	20
Prangins (Radio-Nations) (Switz'l'd)	HBL	9,595		31.27	20
Rome (Italy)	2RO	9,635		31.13	25
Lisbon (Portugal)	CT1AA	9,650		31.09	2.5
Lisbon (Portugal)	CT1CT	9,677		31.00	0.5
Madrid (Spain)	EAQ	9,860		30.43	20
Bandoeng (Java)	PMN	10,260		29.24	10
Ruysselede (Belgium)	ORK	10,330		29.04	9
Tokio (Japan)	JVN	10,710		28.01	20
Tokio (Japan)	JVM	10,740		27.93	20
Medellin (Colombia)	HJ4ABA	11,710		25.62	1
Winnipeg (Canada)	CJRX	11,720		25.60	2
Paris (Radio-Colonial) (France)	TPA4	11,720		25.60	10
Daventry (Gt. Britain)	GSD	11,750		25.53	15
Zeesen (Germany)	DJD	11,770		25.49	5
Boston (U.S.A.)	W1XAL	11,790		25.45	10
Rome (Italy)	2RO	11,810		25.40	25
Daventry (Gt. Britain)	GSN	11,820		25.38	15
Wayne (U.S.A.)	W2XE	11,830		25.36	1
Lisbon (Portugal)	CT1AA	11,830		25.36	2
Daventry (Gt. Britain)	GSE	11,860		25.29	15
Pittsburgh (U.S.A.)	W8XK	11,870		25.27	40
Paris (Radio-Colonial) (France)	TPA3	11,880		25.23	10
Addis Ababa (Abyssinia)	ETB	11,955		25.09	3.5
Moscow (Russia)	RW59	12,000		25.00	20
Lisbon (Portugal)	CT1CT	12,082		24.83	0.5
Reykjavik (Iceland)	TFJ	12,235		24.52	7.5
Parede (Portugal)	CT1GO	12,396		24.20	0.35
Suva (Fiji)	VPD	13,075		22.94	1
Warsaw (Poland)	SPW	13,635		22.00	10
British Amateurs		14,005 to 14,395		21.42 to 20.84	0.01
Vatican City (Vatican State)	HVJ	15,121		19.84	10
Daventry (Gt. Britain)	GSF	15,140		19.82	10
Daventry (Gt. Britain)	GSO	15,180		19.76	15
Zeesen (Germany)	DJB	15,200		19.74	5
Pittsburgh (U.S.A.)	W8XK	15,210		19.72	40
Eindhoven (Holland)	PCJ	15,220		19.71	20
Paris (Radio-Colonial) (France)	TPA2	15,243		19.68	10
Daventry (Gt. Britain)	GSI	15,260		19.66	10
Wayne (U.S.A.)	W2XE	15,270		19.65	1
Zeesen (Germany)	DJQ	15,280		19.63	5
Buenos Aires (Argentina)	LRU	15,290		19.62	5
Daventry (Gt. Britain)	GSP	15,310		19.60	15
Schenectady (U.S.A.)	W2XAD	15,330		19.56	20
Budapest (Hungary)	HAS3	15,370		19.52	6
Zeesen (Germany)	DJE	17,760		16.89	5
Wayne (U.S.A.)	W2XE	17,760		16.89	1
Huizen (Holland)	PHI	17,770		16.88	23
Bound Brook (U.S.A.)	W3XAL	17,780		16.87	35
Daventry (Gt. Britain)	GSG	17,790		16.86	10
Bandoeng (Java)	**PLE**	**18,830**		**15.93**	**60**
Daventry (Gt. Britain)	GSH	21,470		13.97	10
Wayne (U.S.A.)	W2XE	21,520		13.94	1
Daventry (Gt. Britain)	GSJ	21,530		13.93	10
Pittsburgh (U.S.A.)	W8XK	21,540		13.93	40

Recent Inventions

The following abstracts are prepared, with the permission of the Controller of H.M. Stationery Office, from Specifications obtainable at the Patent Office, 25, Southampton Buildings, London, W.C.2, price 1/- each

Brief descriptions of the more interesting radio devices and improvements issued as patents will be included in this section

WIRELESS CLOCKS.

RELATES to means for driving and synchronising a number of clocks through wireless signals transmitted from a distant station. The control station radiates periodically a series of impulses on three different wavelengths. The signals are sent out in sequence, but the first train of signals persists during the sending of the second and third train, and the second train similarly overlaps the third.

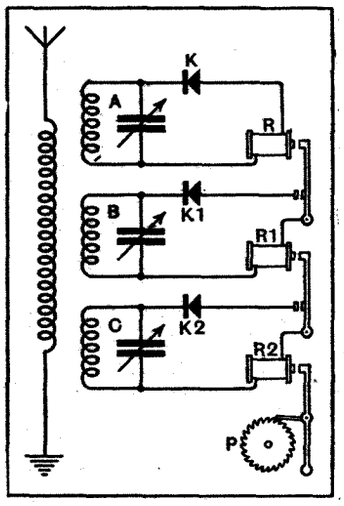

Circuit of the clock driving and synchronising system.

At the receiving end are three circuits, A, B, C, installed in the clock-casing, and tuned respectively to the three different wavelengths. The first train of signals is rectified by a crystal K and closes a relay R to prepare the circuit B for the second train of signals. Similarly the circuit B closes a relay R1 to prepare the circuit C for the third train of signals. The latter are finally utilised by the relay R2 to drive a ratchet-wheel P through one, two, or more steps, depending upon the interval between each complete set of transmissions. The wheel P, in turn, drives the hands of the clock.

J. E. Purser. Application date August 18th, 1934. No. 444316.

o o o o

SCANNING SYSTEMS

LIGHT from an intense source is reflected on to a screw-drum which is fitted with a series of concave mirrors equal in number to the number of scanning lines. The disc is enclosed in a rotating screening-member provided with a spiral slot which throws the image line by line on to the viewing-screen. The arrangement is stated to conserve all the available light, with the object of increasing definition and so allowing the production of a larger picture.

C. D. Fahrney. No. 2021889. (U.S.A.)

o o o o

TELEVISION RECEIVERS

ONE of the difficulties in television is to reproduce the received picture in sufficient detail to allow of enlargement. According to the invention, the fluctuating light from the Neon lamp of the set is recorded upon a photographic film, instead of being projected directly on to a viewing-screen. This is stated to preserve sufficient of the detail of the picture to allow it to be subsequently projected by ordinary optical apparatus on to a screen of the size used in a cinema theatre.

L. de Forest (Assignor to American Television Laboratories Inc.). No. 2026872. (U.S.A.)

o o o o

TELEVISION SYSTEMS

IN any ordinary system of continuous scanning, the image current, at any given instant, possesses frequency-components corresponding not only to a particular elementary area, but also in some degree to the adjacent areas. This is stated to increase the complexity of the resultant signal current, and therefore its frequency "spread" in the ether, over and above what is rigidly required.

In order to restrict the frequency band of the signals, the scanning light-spot is made to dwell for a definite time-interval upon each point of the picture before moving on to the next point. This effect is ensured by interposing a screen fitted with lenses and intervening opaque portions between the source of light and the picture to be scanned.

C. E. Huffman. No. 2017901. (U.S.A.)

o o o o

RADIO NAVIGATION.

THE figure shows an arrangement of aerials used for receiving signals from two radio beacons which send out "overlapping" beams of energy in order to mark out a predetermined course for an aeroplane in flight. The dipole aerial A is normally connected to the receiver, but two other aerials A1, A2 are located on each side of it, and are alternately brought into action by the relays R1, R2 operated from a motor M. So long as the aerials A1, A2 are open-circuited, they have no effect on the incoming signals, but when one of them is closed, as shown by the relay R2, it acts as a reflector and so distorts the field. In these circumstances, equal signals will only be obtained when the aeroplane is flying down the centre-line of the overlapping beam, because only there is the effect of both the reflectors A1, A2 equal and opposite. Any deviation "off course," is shown by the indicator I.

C. Lorenz Akt. Convention date (Germany) October 5th, 1934. No. 444005.

o o o o

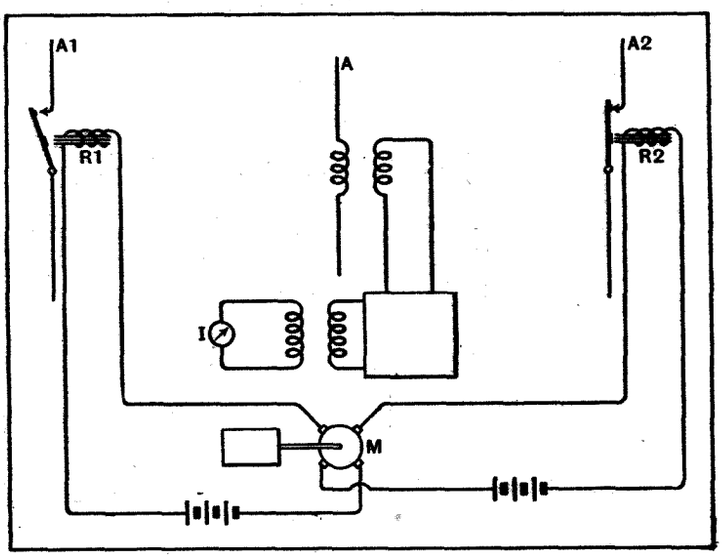

Arrangement of the aerials in the Lorenz aircraft navigation system.

RADIO "LIGHT-HOUSES"

IT is well known to use visible signals, such as Neon lamps, at an aerodrome to assist the navigation of aircraft. Short-wave radio "beacons" are also employed for the same purpose, particularly during fog or when visibility is bad. It is now proposed to use both methods of signalling, either alternatively or in combination.

According to the invention, an optical projector and a short-wave beam transmitter are both mounted side by side, on the same tower structure, the reflectors of the two systems being so arranged that both types of beam have equal angles of divergence, so that they occupy substantially the same position in space. Switching means are arranged to bring one or other, or both, of the beams automatically into operation, according to the prevailing conditions.

The visible and invisible signals give an increasing intensity of indication as the aeroplane approaches the aerodrome.

Marconi's Wireless Telegraph Co., Ltd. (Communicated by the Telefunken Co.) Application date March 27th, 1935. No. 444850.

o o o o

CATHODE-RAY TUBES

THE electrodes of a cathode-ray tube are made conical in shape so as to facilitate correct centring in assembly. As shown, the cathode C, which may consist of a platinum band having a centre "spot" of highly emitting oxide, is carried by a cup-shaped support 1. A further series of cups 2 . . . 5 are separated by corresponding layers of insulation.

The cup 3 is pierced at its top and forms the anode, whilst the cups 4 and 5 each carry a deflecting plate, P, P1. The whole assembly is held rigidly together by threaded pins N, N1, which are bolted to the top and bottom members. In this assembled form, the electrodes are inserted and fixed to the base of the tube.

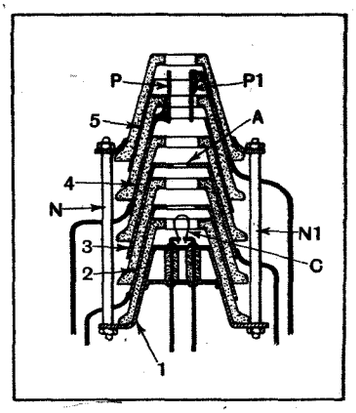

Method of assembling the cup-shaped electrode supports in the cathode-ray tube.

Radio Akt. D. S. Loewe and B. Wienecke. Convention date (Germany) September 23rd, 1933. No. 444633.

o o o o

VALVE CATHODES

THE indirectly heated cathode of a valve is usually of circular or oval cross-section, the heating-wires being located inside it, and the grid or grids and anode arranged symmetrically outside it. This arrangement does not, however, produce a strictly uniform field-distribution, owing partly to variations in the radius of curvature of the emitting surface, and partly to the disturbing effect of the grid-supporting wires.

According to the invention, the emitting area of the cathode is formed as the intersecting surfaces of two cylinders. The grid is similarly shaped so that the density of the electro-static lines of force between grid and cathode is uniform throughout, and the working characteristic of the valve is in consequence improved.

Telefunken ges für drahtlose Telegraphie m.b.h. Convention date (Germany) March 1st, 1934. No. 444844.

The Wireless World
THE PRACTICAL RADIO JOURNAL
26th Year of Publication

No. 880. FRIDAY, JULY 10TH, 1936. VOL. XXXIX. No. 2.

Proprietors : ILIFFE & SONS LTD.

Editor :
HUGH S. POCOCK.

Editorial,
Advertising and Publishing Offices :
DORSET HOUSE, STAMFORD STREET,
LONDON, S.E.1.

Telephone: Waterloo 3333 (50 lines).
Telegrams: "Ethaworld, Sedist, London."

COVENTRY: Hertford Street.
Telegrams: "Autocar, Coventry." Telephone: 5210 Coventry.

BIRMINGHAM:
Guildhall Buildings, Navigation Street, 2.
Telegrams: "Autopress, Birmingham." Telephone: 2971 Midland (4 lines).

MANCHESTER: 260, Deansgate, 3.
Telegrams: "Iliffe, Manchester." Telephone: Blackfriars 4412 (4 lines).

GLASGOW: 26B, Renfield Street, C.2.
Telegrams: "Iliffe, Glasgow." Telephone: Central 4857.

PUBLISHED WEEKLY. ENTERED AS SECOND CLASS MATTER AT NEW YORK, N.Y.

Subscription Rates :
Home, £1 1s. 8d. ; Canada, £1 1s. 8d. ; other countries, £1 3s. 10d. per annum.

As many of the circuits and apparatus described in these pages are covered by patents, readers are advised, before making use of them, to satisfy themselves that they would not be infringing patents.

CONTENTS

	Page
Editorial Comment	25
My Home Set. VI	26
Television Progress in Germany	29
Variable - Selectivity Developments. II	31
Current Topics	33
Philips Car Radio Receiver	34
Broadcast Brevities	37
Unbiased	38
Hints and Tips	39
Listeners' Guide for the Week	40
High-pass and Low-pass Filters. IV	42
On the Short Waves	44
Random Radiations	45
The Marconi Stabilovolt	46
New Apparatus Reviewed	47
Recent Inventions	48

EDITORIAL COMMENT

Renewal of the B.B.C. Charter

A Vote of Confidence

SOMETHING like a sigh of relief greeted the publication of the Memorandum on the Ullswater Committee's Report (summarised in our last issue) in which the proposals to the Government as to the future of the B.B.C. were set forth. Since publication, disagreements and protests with regard to the main issues have been singularly few, and it seems that the B.B.C. can at last consider itself firmly established as yet another of those great semi-official bodies which seem to suit our national temperament so well.

Reading between the lines of the proposals, one gains the impression that the P.M.G., over whose signature they were issued, went out of his way to endorse the present basic constitution of the Corporation, and even guardedly to express the Government's approval at the way in which it has carried out its task. The implied compliment certainly gains emphasis from the fact that the makers of it are by so doing deliberately surrendering the opportunity of themselves assuming control of British Broadcasting. That the vast majority of the public are opposed to a broadcasting organisation conducted either as a Government department or as a commercial concern has been made abundantly clear ; the matter was summed up rather neatly in a letter to the Press by Sir Josiah Stamp, who maintained that our broadcasting authority should be free to make more experiments, and therefore to make more mistakes, than are expected either of the Civil Service or of business.

Although there can be little doubt that most, if not all, of the proposals will ultimately be given effect, it is perhaps premature to comment on them before they are debated. However, we cannot help wishing that we could read into the P.M.G.'s statement on the question of electrical interference a more determined intention to abate the nuisance than is implied by bald acceptance of the Ullswater Committee's recommendation "that the technical investigation of electrical interference with broadcast reception should be completed as soon as possible and that, if necessary, further power should be sought." It must be cold comfort to those who are enduring what they know to be quite unnecessary annoyance.

No Advertising; No "Views"

General satisfaction will be felt at the tightening of the restrictions against broadcast advertising and the fact that it is not even to be allowed temporarily to pay for television in its early stages. The suggestion that the wording of the P.M.G.'s Memorandum should be taken as implying a ban against microphone publicity for the B.B.C.'s own journals seems to be rather far-fetched, though by no means impossible.

That the B.B.C. should have an open mind in all things is an obvious truism, and the extension of the veto against "editorial comment" upon current affairs to the Corporation's publications will be generally welcomed.

We are naturally gratified to hear that Empire Broadcasting, in which we still take a paternal interest, should be "expressly authorised and developed," and are somewhat relieved that the Ullswater Committee's suggestion of propaganda broadcasts in languages other than English, of which we have pointed out some of the dangers, has apparently been shelved.

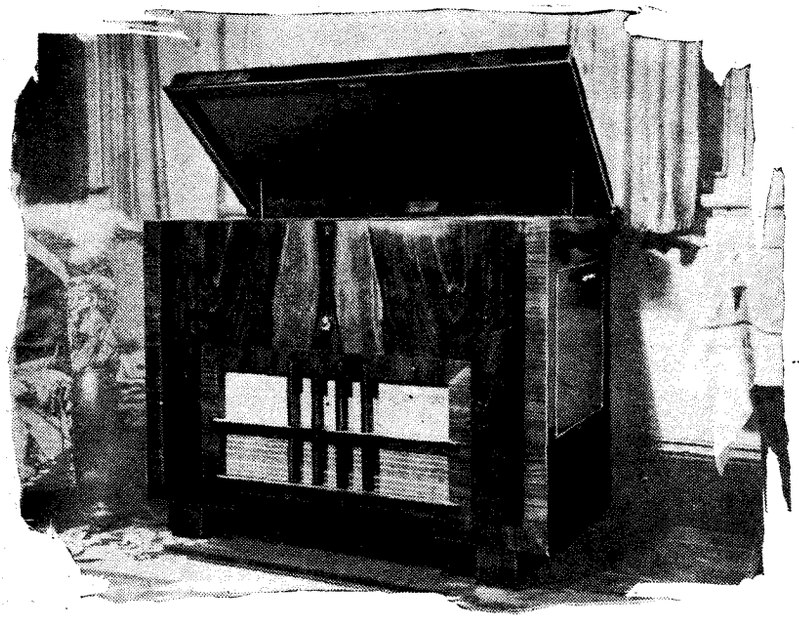

My Home Set

South African Readers Describe Their

By J. FOX MARR and PHILLIP KING

MOST of the previous sets in this series have been developed to satisfy the individual requirements of British listeners. Receiving conditions in the Dominions are vastly different, and this contribution from the Union is therefore of more than usual interest.

IN Great Britain the requirements of those in search of high-quality reproduction of radio and gramophone records are well known, and have been catered for by many excellent *Wireless World* and other designs, which aim at giving the user as faithful a recreation as possible of the various B.B.C. and European programmes which are available.

Listeners in the rest of the Empire, however, with the possible exception of Canada, are not in the happy position of having several alternative programmes from modern, high-power transmitters to choose from, and the question of high quality in reproduction is one which, at any rate in South Africa, does not seem to have received the attention it deserves.

That the main stations of the African Broadcasting Company are capable of putting out very fine quality is a fact unknown to most listeners, as the standard home set is the American all-wave superhet, which as far as fidelity is concerned leaves much to be desired, except in the very expensive models. There is no doubt that on short waves this type of set does its job, and does it very well, but even with the Daventry and Zeesen programmes available the musical listener in this country must depend very largely on gramophone recordings for a wide range of entertainment.

These conditions suggest that the ideal home set should embody reliable short-wave reception, "high-fidelity" reception from the nearest broadcast station, and last, but by no means least, the finest reproduction possible from present methods of gramophone recording, for which, in the writer's opinion, some form of automatic volume expansion is essential. To those who have not heard high quality with AVE (and the two are by no means easy to obtain together) this may seem a sweeping statement, but the improvement which accompanies an extension of the volume range of recorded music has to be heard to be appreciated.

A glance at the circuit diagram of the writers' recently completed radiogram will show that to satisfy these requirements as far as is possible at a reasonable cost eighteen valves are used; this number would have had to be increased had not the Johannesburg station been sufficiently near to give the required output with a simple local station tuner. A wide frequency response is neither necessary nor desirable when dealing with short waves, and variable selectivity an unnecessary complication when only one high-quality station is available. For these reasons, and because of the difficulty and expense of constructing an efficient short-wave superhet from parts available in this country, it was decided to keep the short-wave portion of the receiver entirely separate, and to use a commercial chassis which was a tried and trusted station getter. The six valves of this set, therefore, form a separate group, and although various methods of feeding the detector output into the main amplifier are available, best results on the average short-wave programme are obtained with the original complete assembly. Minor modifications in component values have been made to improve the short-wave performance, as, although wave band switching has been omitted in the circuit diagram, the set is actually an all-waver, and suffered somewhat from the inevitable compromises which this entails. However, the broadcast band is useful for receiving the other A.B.C. stations, when winter listening conditions permit.

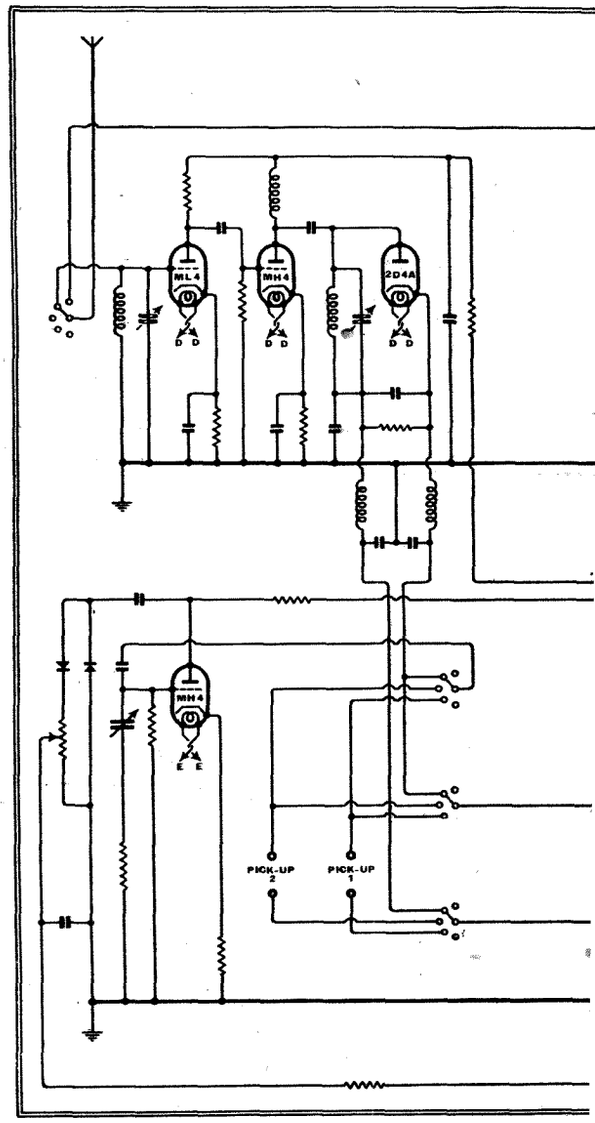

Volume Expansion

Turning now to the local station and gramophone portion, it will be seen that *Wireless World* designs have played a large part in laying what may be called the foundations. The original Quality Amplifier, in fact, was built when the complete set was only an idea for the future, and it will easily be recognised in the photograph of the interior. But good though it was when used as a gramophone amplifier it was felt that something was lacking, and several rather primitive attempts at volume expansion and contrast amplification were made before a double variable-mu triode, the AC/V, was announced. "Now," we thought, dashing off a postal order, "everything in the garden will be lovely." As the weeks rolled by this view had to be modified, until after three months and some cor-

—VI. Quality Radiogram in the Transvaal

Interpretation of the Ideal Set

respondence the postal order was returned with a polite intimation that these valves were no longer being made.

However, after a good deal of experimenting it was found that VMS4B's could be used successfully in push-pull, and the present circuit was adopted. These two valves are connected as triodes using the screen as an anode, the actual anodes being earthed to minimise valve noise. To provide adequate signal handling capacity the anode voltage has been kept high, actually about 270 volts.

The time constant for the expansion has been carefully chosen, and it will be seen that component values in the input circuit to the bias voltage amplifier give a falling characteristic to avoid over-accentuation of single instruments or voices in the upper register. Loaded transformer coupling is used between the VMS4B's and the next stage to avoid undesirable feed back, which in this case caused the AVE voltages to vary the bias values in the amplifier unnecessarily when resistance-capacity coupling was employed.

Throughout the equipment great care has been taken with smoothing, decoupling and filtering; the heater leads are bypassed to earth at each valveholder and all mains leads are of screened cable. With these precautions it has been found possible to use unscreened wire for all the pick-up, volume control and input leads without any introductions of hum, in spite of neither side being earthed. Thus are preserved at the outset those valuable

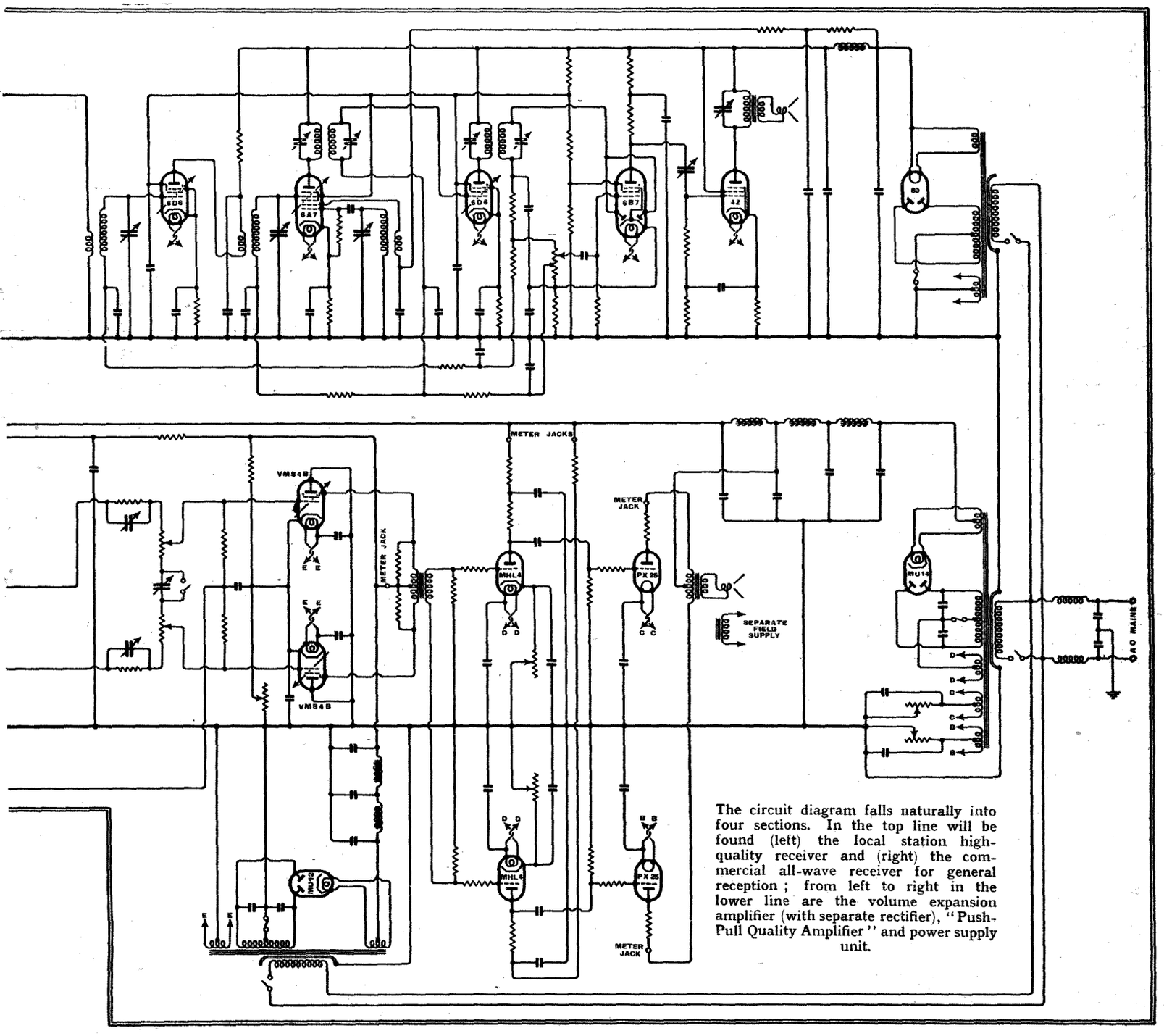

The circuit diagram falls naturally into four sections. In the top line will be found (left) the local station high-quality receiver and (right) the commercial all-wave receiver for general reception; from left to right in the lower line are the volume expansion amplifier (with separate rectifier), "Push-Pull Quality Amplifier" and power supply unit.

My Home Set—VI

upper frequencies which in so many cases never reach even the first valve.

The amplifier itself was modified to take PX25's, and the load resistances for the MHL4's have been reduced somewhat from the original value.

Johannesburg being, as was said, a truly "local" station, enough input to load a diode detector is obtained by using a Colebrook double-triode HF stage, with small screened coils tuned by pre-set trimmer condensers. Owing to there being no other broadcasting station within a 300-mile radius, it has been possible to keep the curve of the tuned circuits very flat (no attempt at selectivity having been made), and to make the most of Johannesburg's excellent frequency range, which is approximately level from 40 to 10,000 cycles. The detector output is taken, after filtering, to the multi-contact switch which acts as a selector for the whole set, and then through the volume control to the amplifier input. As a large proportion of the local programme consists of records, volume expansion is useful and effective on these items, and it is also very helpful on an over-controlled studio programme.

Bass and Treble Compensation

No separate phase reversal is provided, as this is obtained across the symmetrical volume control, which incorporates a flexible system of bass and treble compensation, allowing a progressive increase of treble, or bass, or both, to be obtained. The voltage available at the grids of the VMSB's is only one-third of the total, the variable resistances being 50,000 ohms, and the fixed resistances (across which are connected the treble compensation condensers) 100,000 ohms in each half of the circuit. The expansion bias amplifier, however, receives the full available voltage in order to obtain an adequate range of expansion, which is controlled from the top panel.

In spite of the reduced input, there is no difficulty in fully loading the 12-watt output stage, which is used to drive a Hartley Turner speaker with a 40-watt field. This has recently been fitted with a twin cone diaphragm, and is mounted on a stand bolted to the floor of the cabinet.

It will be seen that two motors and crystal pick-ups are used, an arrangement which enables a continuous programme to be given without much trouble, though an automatic record changer may be substituted at some future date. Some difficulty was experienced at first with mechanical reaction at low frequencies of about 10-20 cycles, but this has been overcome by mounting each pick-up on a solid extension of the motor plate, and suspending the whole unit on soft rubber bushes.

The excellence of the low-frequency response may be judged by the fact that on gently pushing the pick-up needle to and fro, the loud speaker cone will follow this movement quite easily.

The overall response, tested with standard frequency records, is very satisfactory, and the reproduction as a whole extremely pleasing, especially with well-recorded small orchestras and solo instruments, but the set only comes into its own on the "intimate" type of variety show which is produced in the small studio at Johannesburg, and on such occasions the results are really satisfying, even to a most critical ear.

When the new Broadcast House, now in course of erection, is complete, it is hoped that with modern studios and equipment, larger orchestral transmissions will be equally good; at present they are badly handicapped by antiquated building and studio conditions.

One of the accompanying illustrations shows the completed receiver in its locally made cabinet, which is of very solid construction and has an open wire gauze back. No trace of cabinet resonance has been detected, and, as the photograph of the interior with the back removed shows, a Celotex speaker board is fitted for absorbing vibration.

It is hoped that this receiver, while not embodying many of the recent technical developments which are considered a *sine qua non* in present-day European technique, will show that interest in high quality is not confined to the British Isles.

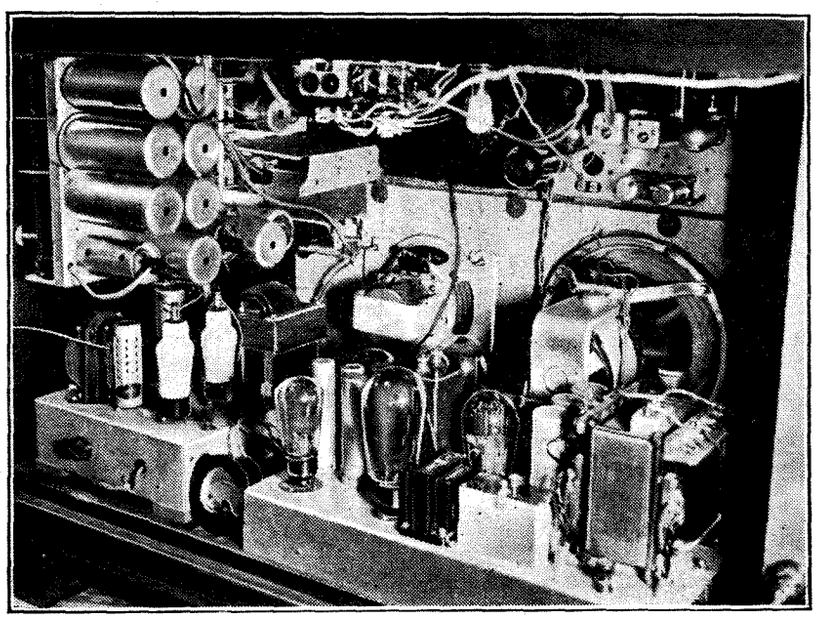

General view of the interior of the cabinet. Separate loud speakers are used for general listening and for local station reception. A "Wireless World" Quality Amplifier is used both for gramophone and local work, while a commercial all-wave chassis provides long-distance reception.

Volume contrast expansion is available for radio reception as well as for the output from the two piezo-electric pick-ups. The controls include a flexible system of bass and treble compensation.

Telepathy and "Waves"

AN extraordinary instance of telepathy has recently been investigated by Latvian scientists. A ten-year-old girl has long been able to follow everything that is passing in her mother's mind. When, for instance, the mother opened and read a letter the child, sitting in the next room, was able to repeat its contents word for word. During the tests it was decided to attempt to discover whether there was any truth in the theory that thought waves are of electromagnetic character. The mother was placed in a room enclosed by heavy metallic screening, and it was found that her daughter could read her thoughts as easily as ever. The next experiment sought to discover whether sound waves of some kind were involved. It took place at the Riga broadcasting station, which contains sound-proof studios. When the daughter was screened from her mother by sound-insulating walls, she was unable to receive any thought transmissions whatever. It has, therefore, been suggested by the physicists who conducted the experiments that telepathy may be due to minute sound waves of some kind. There is, however, one point which appears to have been overlooked: the last series of experiments were made close to a 15-kilowatt wireless transmitting plant, and it is possible that it was the radiations of the transmitter and not the presence of sound-proof walls that interfered with telepathic communication.

Television Progress in Germany

THE PRESENT POSITION AND AN INDICATION OF FUTURE DEVELOPMENT

BY OUR BERLIN CORRESPONDENT

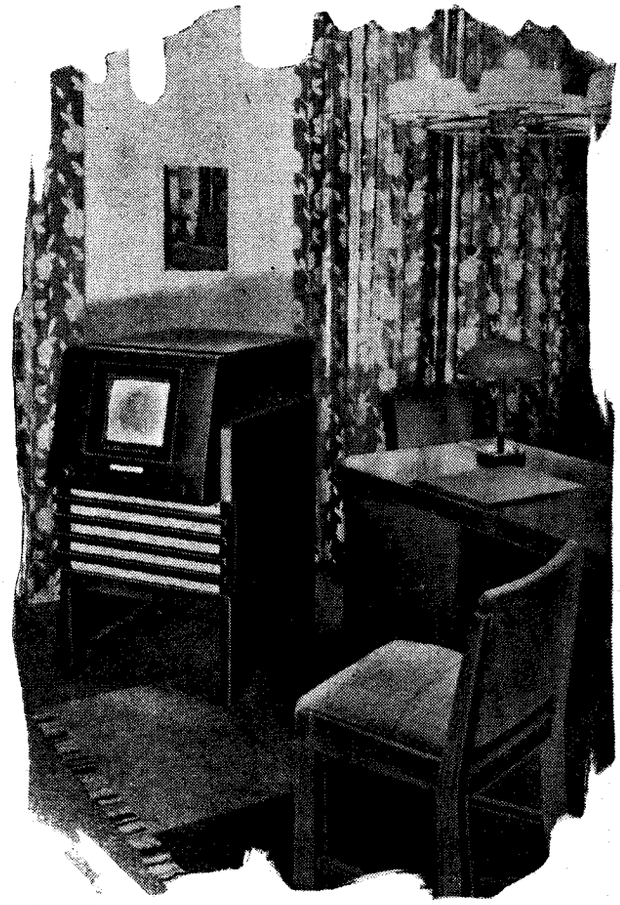

The Telefunken television receiver requires an aerial of only 10 feet to provide adequate reception. A picture of 18 × 22 cms. is sufficiently brilliant not to require a darkened room for looking-in.

IN Germany, the first low-definition television broadcasts started in 1929. These were replaced in April, 1934, after experiments with 48, 60 and 90 lines, by high-definition pictures of 180 lines and 25 frames per second.

The transmissions were of a purely experimental nature and were picked up by enthusiastic amateurs and by people in laboratories working on the development of the new technique. They consisted of films and were organised by the television laboratories of the German Post Office.

On March 23, 1935, the German Broadcasting Company inaugurated a high-definition programme service. A number of public televiewing rooms were provided in different parts of Berlin and one at Potsdam to enable the general public to become acquainted with the new medium. These televiewing rooms were thought necessary as neither the industry nor the authorities responsible for the experimental transmissions wanted to launch out into a sales campaign for expensive receivers which might become obsolete within a very short while.

The fire at the Radio Exhibition in 1935 destroyed the two ultra-short-wave Witzleben television transmitters. New ones were built and completed by December 31st, 1935. These new transmitters were designed for the same standard of definition, namely, 180 lines and 25 frames per second, although German television experts had, at the time, a service with still higher definition in mind. It was, however, thought necessary to re-open the Berlin television programmes with the least possible delay rather than wait until transmitters for the higher standard had been developed and constructed.

The television-less period last autumn was found useful for a complete reorganisation of television responsibilities in Germany. The technical television department at the Broadcasting House was disbanded, as the Post Office was given sole charge of the engineering side. On the other hand, the Post Office discontinued its experimental programmes which had previously been broadcast alternatively with those supplied by the Reichs-Rundfunk-Gesellschaft. With the reopening of the programme service on January 15th, 1936, the broadcasters took over the entire programme side of television, leaving technical development and operation to the Post Office. This is the same arrangement as that employed in the early days of German broadcasting.

At the present moment the Berlin television programmes consist of excerpts from entertainment films, full-length educational films, and the latest edition of a full-length news-reel supplied by the film industry. There are also direct transmissions of head-and-shoulder pictures of artists. Programmes change once a week and are broadcast every night from 8 to 10 p.m.

In search of television news, the reporters' van of the German Broadcasting Company's television section employs an intermediate film system which enables scenes to be photographed and televised within 30 seconds. Telephoto lenses are employed when the van cannot get near to the desired objects.

No Receivers Sold Yet

In spite of various announcements to the contrary, no television receivers are sold to the general public in Germany at the present moment. Theoretically a person wishing to buy a receiver can do so by applying to the manufacturers. In practice this has hardly ever taken place, or if it has the application has been turned down. A careful estimate substantiated by officials shows that at the present moment there are only about 100 television receivers in actual operation in Berlin or, for that matter, in Germany. These receivers are in the hands of officials and of individuals connected either with the industry, the Press or the broadcasting company.

The Loewe television receiver, which at one time was stated to cost 600 marks, has

Television Progress in Germany—

been sold for a price in the neighbourhood of 1,000 marks. The price of RM 600 is said only to have been applicable if it had become possible to manufacture a large number, and the price does not include dealer's profits.

Information Withheld

Last year a decree signed by Herr Hitler placed television under the jurisdiction of the Ministry of Air as well as that of the Post Office. This decree resulted in the strict control of all publications concerned with television in Germany. Beyond official bulletins issued from time to time by the Post Office and approved articles in the scientific journals there is no information available regarding the development of the technique in Germany.

It is therefore difficult to say anything as to the future of German public television. It is known that the Post Office are preparing intermediate film and also direct television apparatus for televising scenes from the main stadium of the Olympic Games. It is expected that the Iconoscope will be used, but it is rumoured that definition will only be 180 lines.

On the other hand it is generally believed that a new standard of definition, namely, 375 lines, 50 frames inter-lace-scanning, 25 complete frames per second, will be introduced some time towards the end of the year.

The two new television transmitters, one for the Brocken and the other for the Grosse Feldberg, will probably be equipped for the higher definition. Undoubtedly the programme builder will be given Iconoscopes for the transmission of outdoor scenes and for extended studio scenes some time after the German Radio Exhibition, which is to open on August 28th. It is understood that a large section at the Exhibition will be devoted to television and all the very latest developments, as far as they are passed by the Air Ministry, will be shown to the public.

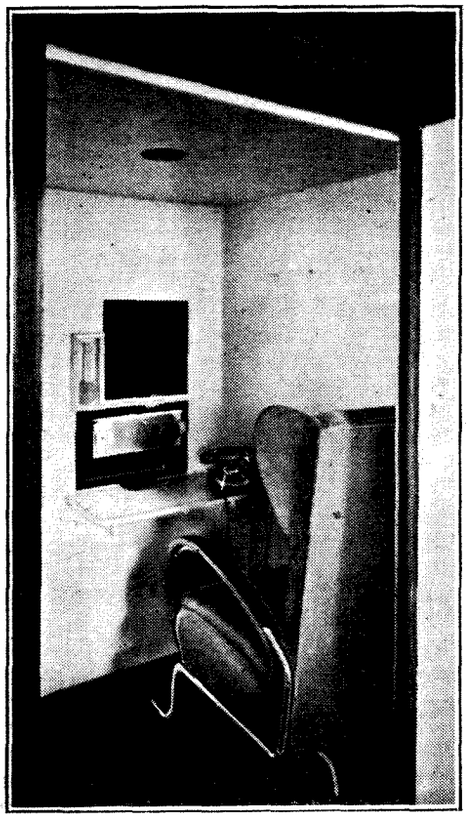

Another side of television development in Germany is the public Television-Telephone service. The inside of a booth at the Leipzig end of the link with Berlin is seen above. The system employs mechanical scanning with 180-line definition at 25 frames per second.

The German Post Office Television-Telephone offices in the West-end of Berlin. It is from here that calls can be made to Leipzig at a cost of 3.50 marks for three minutes.

With the introduction of a new standard of definition, which will probably remain for some years, the German television industry may venture upon a small programme of production for actual sale to the general public.

Programme Limitations with Low Definition

Very briefly these are the outstanding facts regarding the present position of public television in Germany. It is perhaps necessary to stress the point that the present programme service is being provided with the help of apparatus which, in the words of the German Postal Ministry's Secretary of State, "is obsolete, and the standard of a year ago." This makes things especially difficult for those in charge of the programmes, as they are aware of the new technical possibilities and yet must wait to have them placed at their disposal. Higher definition than 180 lines is essential for the transmission of larger scenes, and more than 25 frames per second seems equally important to the "looker," since more than 30 minutes "viewing" become very trying to the eyes with the flicker of 25 frames.

Finally, the provision by the German Post Office of the means of seeing by television at the same time as talking over the telephone between Berlin and Leipzig probably helps towards making the public "television minded."

The N.P.L. "At Home"

ONCE a year the National Physical Laboratory is the subject of a "visitation" from the Board, and advantage is also taken of the occasion to throw open the doors to technical representatives of the many industries whose problems fall within the scope of the Laboratory.

Calibration in terms of fundamental units is one of the principal activities, and in the Physics Building visitors were shown the new soundproof rooms for the absolute calibration of microphones and also the arrangements on the roof for taking open-air measurements of loud speaker performance.

In the radio section a wide variety of problems are undergoing investigation. Exploration of the ionosphere by continuous-recording cathode-ray apparatus is one of the most interesting of these, and a display of photographic records showing the changes of state to be met with included one of the rare instances of a complete absence of ionisation, coinciding with a disturbance of the earth's magnetic field and resulting in a momentary cessation of all long-distance communication.

The apparatus on view ranged from a beautifully finished rack-built frequency-measuring equipment, giving direct readings of frequency from 1-75 megacycles, to a simple method of mounting acorn valves in ultra-sort-wave circuits with ring type by-pass condensers clamped underneath the valve base.

In the field adjoining the Radio Department hut a demonstration was given of a loop direction finder with a push-pull circuit working on wavelengths below 10 metres. For the occasion a transmitter with a vertical dipole aerial had been set up at the other side of the field, and visitors were able to verify visually the bearings given by the frame.

The Radio Industry

TRIX equipment is again being used this summer for sound amplification at the Open-Air Theatre, Regent's Park, London. The elaborate microphone mixer network includes twelve independent faders.

◇ ◇ ◇ ◇

Keates and Co., Ltd., 91-93, Bishopsgate, London, E.C.2, have been appointed sole London distributors for test equipment made by William F. Brown Radio, Ltd., Ossillo Works, Brierley Hill, Staffs.

◇ ◇ ◇ ◇

Services from St. John's Church, Largs, are relayed to holiday-makers and visitors on the promenade through a G.E.C. sound reproduction installation. The G.E.C. has received orders for the installation of a loud-speaker call system at Jersey Airport.

◇ ◇ ◇ ◇

Aladdin Radio Industries, Inc., of Chicago, send us details of a wave trap (for suppressing morse interference) in which final tuning is carried out by movement of an iron core.

◇ ◇ ◇ ◇

Reslo horns, units and microphones are being used for the public-address installation at the London Zoo, which has been carried out by Universal Renters, Ltd.

◇ ◇ ◇ ◇

A leaflet describing the RCA Cathode Ray Oscilloscope which has recently been placed on the market by R.C.A. Photophone, Ltd., Electra House, Victoria Embankment, London, W.C.2, is now available

◇ ◇ ◇ ◇

To clear up misconceptions regarding the various forms of Goltone interference-suppressing aerial systems, a leaflet has been prepared giving concise details of the uses of the various appliances.

Variable-Selectivity Developments

PART II. PRACTICAL DIFFICULTIES AND THEIR SOLUTIONS

By W. T. COCKING

EVEN although the transformers are properly designed, good results cannot be secured from a variable-selectivity amplifier unless they are correctly used. It is shown in this article that the conventional method of alternating valves and transformers is not always the best.

THE fact pointed out in Part I that the AC resistance of the last IF valve can be used to load the IF transformer in its anode circuit, so that its Q is halved, indicates one difficulty which may be encountered in the other stages. In the last stage it is necessary to reduce the Q by this amount, but if the resistance of a valve is sufficiently low to accomplish this, how then can we operate the early stages in which it must remain at its full figure?

One solution would be to increase the Q of the coils so that the correct figure would be secured when the damping of the valve is taken into account. This is not permissible under normal conditions, for the early valves must have their bias varied for volume control purposes, either manually or automatically; their AC resistances will consequently change with the bias applied, and hence with signal strength. Thus the only solution is to choose valves and operating conditions so that at their lowest values the AC resistances are very high compared with the dynamic resistances of the tuned circuit.

As the dynamic resistance of the type of tuned circuit which we are contemplating is 0.41 megohm the valve resistance should be at least 4 megohms. This figure may be obtained with any valve by increasing its grid bias sufficiently, but there is naturally a falling off in the mutual conductance and hence in the amplification. The best valve to choose is consequently the one having the highest mutual conductance for a given AC resistance. Ordinary screen-grid valves are unsuitable, and many HF pentodes do not meet the requirements. The VMP4G, for instance, although eminently suitable for use in the last IF stage, where its comparatively low resistance can be turned to good account, is not suitable for preceding variable-selectivity transformers having a dynamic resistance of 0.41 megohm. Its resistance can, of course, be increased sufficiently by operating it at a high initial bias, but its mutual conductance then becomes very low—of the order of 0.1-0.2 mA/V.

If a type of valve having a high resistance at low bias is chosen, however, quite a high mutual conductance can be secured. The VPT4B is a valve of this type, and when biased to −3.4 volts it has a resistance of 4 megohms and the respectable mutual conductance of 1.7 mA/V. Very similar results are secured with the 9A1 valve with a bias of −2.5 volts.

The Importance of Input Impedance

The frequency-changer is just as important, for it damps the first IF tuned circuit. With the coils considered here the heptode is unsuitable, but both the octode and triode-hexode can be employed if operated with somewhat greater bias than usual.

It is not only the AC resistance of a valve which can adversely affect the characteristics of the band-pass filters, however, for the input impedance can do also.

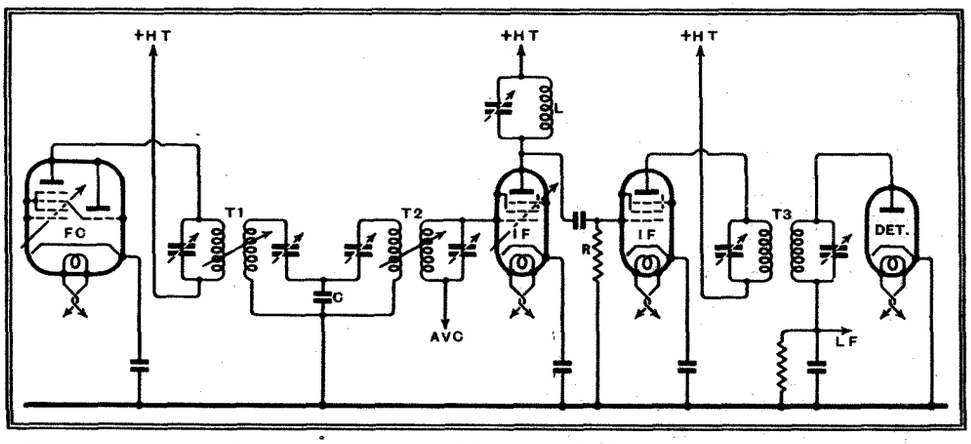

Fig. 5.—The circuit diagram of an IF amplifier which fulfills the requirements laid down in this article. The grid leak R is of low value so that the Q of the tuned circuit forming the coupling is very low.

The input impedance is due very largely to feed-back through the grid-anode capacity of the valve, and in spite of the low figure now reached—about 0.0025 mmfd.—the feed-back is sufficient to have a very serious effect. The input impedance can be considered as a fictitious condenser and resistance between the grid and cathode of the valve. The condenser does not greatly concern us at present, but the resistance is very important, for its value and sign change rapidly with small changes in frequency. The exact effect depends upon the valve characteristics and very greatly upon the anode circuit.

When there is a tuned circuit of high Q in the anode circuit and the stage gain is high, the input resistance is infinitely high at a frequency very close to resonance, but it falls very rapidly for frequencies removed from resonance by only a few thousand cycles. In the case of the coupling to the detector discussed in Part I, the input resistance will have a value of about 0.5 megohm only at a certain frequency higher than resonance but within the sideband range, and a value of about −0.5 megohm at another frequency lower than resonance by the same amount. On one side of resonance the input resistance is positive and damps the grid circuit, on the other it is negative and causes regeneration. In this case the minimum value of input resistance is higher than the dynamic resistance of the tuned circuit, so that there will not be instability, but it is so near to it that the performance will be very greatly affected.

The input impedance will make it impossible to trim the circuits correctly with a low grid bias, and if they are trimmed at a high bias the correct resonance curve will not be secured at a low bias. The resonance curve will be asymmetrical and, moreover, will vary with signal strength, since the bias of early valves is dependent on this.

It can be stated at once that there is no way of overcoming this trouble with-

Variable-Selectivity Developments—

out greatly sacrificing amplification if conventional circuit arrangements are adhered to. It is possible to overcome it, however, by unconventional methods. The usual arrangement of six-tuned circuits with two IF stages is shown in Fig. 4 of Part I, and valves alternate with pairs of circuits. By adopting the arrangement of Fig. 5, however, the defects of the usual system can be overcome.

It will be seen that the coupling between the last IF valve and the detector remains unchanged and is provided by the transformer T3 having coils of normal Q which are reduced to Q/2 by the damping of the last IF valve and the detector. The two variably-coupled transformers T1 and T2 are themselves coupled together by the condenser C, and the chain of four circuits is placed between the frequency-changer and the first IF valve. Even when the frequency-changer is biased sufficiently to raise its resistance to a high value, a gain of about 25 times can be secured from its grid to that of the first IF valve. Provided that we can so operate this first IF valve that its input impedance is very high compared with 0.41 megohm, that it gives a gain of about 50 times, and that its coupling to the following valve is not affected by the input resistance of that stage, we have a complete solution to our difficulties.

Coupling the IF Valves

An investigation into the question of input resistance showed that it was not possible to secure a reasonably high degree of amplification combined with a high enough input resistance with any non-resonant coupling. With a coupling tuned to resonance, however, the input resistance, although very high at resonance, assumes comparatively low positive and negative values on either side of resonance, the actual values being dependent on the stage gain and the grid-anode capacity of the valve. When the stage gain is 50 times the input resistance is ±5.47 megohms. This gain can be obtained with a VMP4G valve and a tuned circuit L having a dynamic resistance of 19,750 ohms. This is low enough for the input resistance of the following stage—−0.5 megohm—to have negligible effect.

It might be thought that this would meet the case, but a resistance of even 5 megohms is rather low to place across a tuned circuit having a dynamic resistance of 0.41 megohm *when the resistance changes rapidly with frequency and is positive on one side of resonance and negative on the other.* If the two frequencies at which the input resistance is a minimum can be separated more widely from resonance than usual, so that they are outside the sideband range of frequencies, then the input resistance will be greatly increased over the important range. The frequency separation of the minima from resonance depends on the Q of the circuit L (Fig. 5) and increases as Q decreases. The best results are consequently secured by using a circuit of as high an inductance as possible and then reducing Q until the desired dynamic resistance is obtained.

By making L as high as 2,600 μH a dynamic resistance of 19,750 ohms can be secured with a Q of only 2.6, and the input resistance is a minimum at frequencies about 93,000 c/s different from resonance. This is so great that within the sideband range of frequencies the input resistance is always higher than 25 megohms! In practice, a somewhat lower inductance is desirable, and with a coil of about 2,000 μH the input resistance can be kept above 20 megohms over the pass-band of the filters. This is high enough to permit the correct filter characteristics to be secured and to prevent them from varying with the grid bias applied to the controlled valves.

This circuit L is, of course, tuned to the intermediate frequency, but it adds practically nothing to the selectivity of the receiver, its purpose being merely to enable the first IF valve to give good amplification while retaining a very high input resistance. It is, of course, very flatly tuned, so that its trimmer hardly adds to the complication of the set.

From what has been said it can be seen that if higher selectivity is required than can be obtained from six circuits, three more must be used, and an additional valve will be necessary to maintain the amplification. It is suggested that a three-circuit coupling be used in the anode circuit of a valve, such as the VPT4B, to precede the first IF valve of Fig. 5, the new valve being fed from the transformer T2. As the additional valve will have to be operated at a high bias in order to keep its gain reasonably low, no difficulties about the input impedance should arise.

In the majority of cases, however, the six circuits of Fig. 5 will suffice and enable adequate amplification and selectivity to be obtained. It will, of course, be appreciated that the above remarks concerning the input resistance of the valves only apply to feed-back through the inter-electrode capacity, and the precautions advised do not in any way reduce the possibilities of trouble through other stray couplings. Thorough screening and decoupling are essential if the expected results are to be realised in practice, for couplings which are too small to cause instability can have a very serious effect upon the symmetry of the resonance curve.

It can easily be seen that if three different types of IF transformers are available, practically all requirements can readily be met. The most important is the type embodying a pair of variably coupled coils, for it is an essential part of every set embodying variable selectivity, and in Fig. 5 is used for T1 and T2. In addition, a transformer having fixed loose coupling between the coils is needed in many cases for the coupling to the detector; this is exemplified by T3. The third type consists of a single coil with its trimming condenser, and is used in building up more complex systems giving higher selectivity.

In all transformers, with one exception, the coils can be the same and have an inductance of 1,500 μH and a Q of 93.5 giving at 465 kc/s a dynamic resistance of 0.41 megohm. Air-dielectric trimmers are almost essential in view of the higher losses of the mica-type, and they are also very beneficial in permitting more precise adjustment and in being less affected by temperature and humidity. In the case of the detector coupling T3 the primary can be the same as the other circuits, but the secondary must be of only 457 μH, and in view of the larger tuning capacity required a purely air-dielectric trimmer is hardly possible. Either a mica-dielectric component must be used or, better, a fixed condenser of low losses in parallel with an air-dielectric trimmer.

The Transformers

The mechanical construction of all transformers must naturally be good if satisfactory results are to be secured over a long period of time. It is, however, particularly important in the case of the variably-coupled type, and with these it is essential that capacity coupling between the primary and secondary be kept as closely as possible to zero. Such capacity coupling prevents the peaks in the resonance curve from opening out symmetrically about the resonance frequency and makes it necessary to retune the set after reducing the selectivity besides preventing the proper shape of resonance curve from being obtained.

At the time of writing no transformers built to these characteristics are commercially available. It is understood that they are being produced, and it is possible that they may be obtainable at the time this article appears. There is, however, no reason why the principles laid down should not be applied with existing transformers. These are likely to be of somewhat lower Q, and they are certainly of lower dynamic resistance. These factors will tend to make both selectivity and amplification lower than they need be, but they make the input impedance of the valves less important and also the exact constants of the coupling to the detector.

B.T.S. Coils for Short-wave Battery Four

A PAIR of ultra-short wave coils for *The Wireless World* Short Wave Battery Four receiver has been sent in for test by British Television Supplies, Ltd., Faraday House, 8-10, Charing Cross Road, London, W.C.2. They agree in every particular with the recently published description of the special coils, and when fitted in the set gave the required waveband coverage.

The specification has been followed so closely that only a very small adjustment of the reaction condenser was necessary to obtain oscillation when these coils were inserted in the place of our own pair.

The upper and lower wavelengths are 12.2 and 7.3 metres respectively, so that they can be regarded as entirely satisfactory and are confidently recommended.

The four-pin model costs 3s. and the six-pin 3s. 6d.

CURRENT TOPICS

EVENTS OF THE WEEK IN BRIEF REVIEW

MR. MAURICE CHILD of the Golders Green and Hendon Radio Scientific Society with the 80-metre receiver with which he and his group succeeded in obtaining first place in the recent direction-finding competition organised by the Society near Harpenden, Herts. The results were very close, the difference of error between the first three groups being only one degree.

Ceylon Listeners

THE number of licensed listeners in Ceylon is now rapidly approaching the 4,000 mark, there being a steady increase of from 50 to 100 per month.

3,000,000 Listeners in France

BY the time that these lines appear in print it is highly probable that the three-millionth wireless licence will have been sold in France. Broadcasting in that country is increasing in popularity at a much greater rate than at any time previously and the whole of the French radio industry is looking forward to a period of great prosperity.

Licence Stamp in Germany

IN Germany there is usually a sharp decrease in the number of licensed listeners during the holiday months owing to the fact that licences expiring in summer-time are, in the case of many listeners, not renewed for some little time. This year the number of listeners in Germany fell by over 80,000 during the month of May, and in June, July and August the decrease will probably be much greater. The number of listeners in Germany is now slightly in excess of seven-and-a-half millions.

Statistics Which Stagger

SOME interesting statistics—if, indeed, statistics can ever be other than boring—are given by the U.I.R. concerning the estimated consumption of electrical energy by wireless receivers throughout the world during 1935. The total consumption worked out at 1,997,000 kilowatt-hours. The report omitted to mention, however, in what manner these figures were obtained and whether or not pirates were included in the census.

Boxing Broadcast

REPORTS state that the N.B.C. has secured the rights for broadcasting the fight for the heavyweight championship of the world, which is to take place in the U.S.A. in September, the two men concerned being Schmeling and Braddock.

Le Quatorze Juillet

THE first combined broadcast to be given by French stations will take place next Tuesday on the occasion of the 147th anniversary of the storming of the Bastille, which is always celebrated in France, the occasion being known as the "Fête Nationale."

Two Hundred New Broadcasting Stations

IT is often asserted that there are already more than enough broadcasting stations in the world, the ether being hopelessly overcrowded, more especially in Europe.

It comes as something of a shock therefore to learn that the new stations at present being built are approaching the two hundred mark, sixty-two of these being in Europe. It would seem, therefore, that in order to avoid interference, sets will have to be still more selective. This will naturally entail a further sacrifice of quality unless there is any truth in a rumour concerning a marvellous new "contraction and expansion" scheme being developed by a South American scientist.

New Use for Depth Sounders

IN Germany the well-known echo-sounding device which is normally used to ascertain the depth of water under a ship's bottom has been employed for an entirely new purpose. A German firm has produced a special apparatus to enable fishing vessels to locate shoals of fish very rapidly. The fundamental principle used is exactly the same as that employed in the machine which is used for sounding the ocean depths.

Tests for the Microphone-Struck

AN interesting competition for broadcasting aspirants was recently conducted by Dr. L. E. C. Hughes for the Bec Literary Institute, the judge being Miss L. Harrison, a professional teacher of microphone technique. The tests were very exacting. Pieces were read from ancient and modern classics, including a modern language. It is said that the tests have excited interest not only at Broadcasting House, but also among those who are responsible for preparing the sponsored concerts abroad.

Walking-Stick Transmitter

CONSTANT improvement is being made in the arrangements for giving running commentaries of public events in the U.S.A. We have already heard of the top-hat transmitter, and now it appears that an entirely new one has been evolved for use under certain circumstances. The aerial of this new instrument is concealed in a walking-stick, in which is also located the oscillator, which consists of a valve of the acorn type. The power supply is carried in a belt similar to the well-known money-belt. The LF amplifier and modulator are carried in a compact binocular case slung under the armpit. The microphone, which is of the small crystal type, is carried in the lapel of the coat or worn on the wrist. The wavelength used by this transmitter is said to be in the neighbourhood of 1½ metres. These various components are connected up by flexible wire concealed in the clothing of the commentator. In the case of the walking-stick, flexible wire comes down the coat sleeve and terminates in a tiny plug which is inserted into a suitable socket in the head of the stick.

THE UNOBTRUSIVE COMMENTATOR. Not a new-style short-wave transmitter, but B.B.C. microphone gear, concealed by the hat of the commentator, who is seen standing on the steps of St. Paul's during the broadcast of the London University Centenary Thanksgiving Service.

An Unknown Tongue

A FEW weeks ago a special broadcast was given in Poland consisting of a running commentary on a certain event. The commentary was given in an unknown tongue, and listeners were invited to write in and state what language was being used and what was the nature of the event. Nearly three hundred replies were received, and practically everybody guessed that the event dealt with was a boxing match, the clues, such as the sounding of the gong at the end of each round, being very clear. With regard to the language, all kinds of suggestions were made, the most favoured being Hungarian, Hebrew and Amharic. It is not surprising, however, that nobody succeeded in guessing the language, since the broadcast merely consisted of a Blattnerphone commentary of a boxing match, the tape being passed through the transmitter backwards. Naturally the sounding of the gong and other noises incidental to a boxing match sounded just the same backwards as forwards.

The New Pye Sets

IN connection with the description of the new range of Pye receivers on page 630 of the June 26th issue, it should be noted that the T.63 portable is similar to the previous Model T.Q. and not the T.9, as was stated.

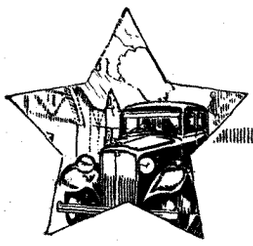

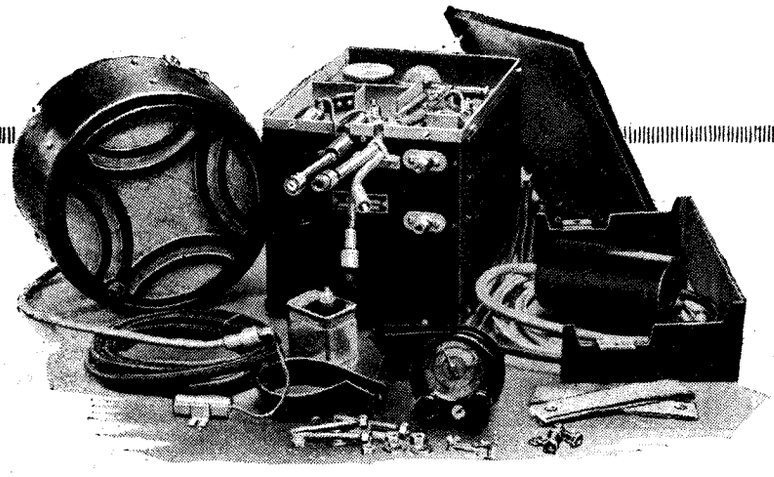

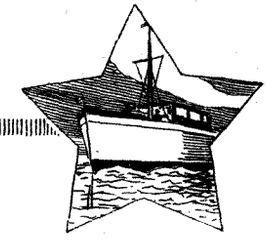

Philips Model 246B

CAR RADIO RECEIVER WITH AN INTERESTING NOISE-SUPPRESSION SYSTEM

ALTHOUGH the circuit of this set makes full use of up-to-date broadcast superheterodyne practice, there is little in its external appearance to suggest the conventional wireless receiver. It is, in fact, designed on the lines of other motor accessories to withstand the vibration, heat and dust of road travel.

The main receiver unit is contained in a steel box measuring $10\frac{1}{2} \times 7\frac{1}{4} \times 7\frac{1}{2}$in. This may conveniently be mounted (on the bracket provided) on the engine side of the scuttle. All connections to the receiver are made through sockets similar to speedometer cable connections, and the set can be installed or dismantled by motor mechanics without any previous acquaintance with wireless servicing.

The loud speaker is mounted separately in a circular baffle box $8\frac{1}{4}$in. in diameter and $5\frac{1}{2}$in. deep. This may be tucked away underneath the instrument board or at any other convenient point inside the car.

The set will work satisfactorily with the aerial mats which are nowadays fitted as standard in the roofs of many saloon cars, but best results are obtained with the special aerial system supplied with the set and designed to fit underneath the car. It consists of two parallel rods joined at one end to form a long U. The aerial lead-in is taken through a screened lead from the closed end, and the rods are suspended on rubber pillars so that no damage is sustained if the aerial should strike an obstacle on the road.

FEATURES. — ***Type.***—*Superheterodyne receiver for a 12-volt DC supply.* ***Circuit.***—*Var.-mu pentode HF amplifier—octode frequency-changer—var.-mu pentode IF amplifier—double-diode second detector and AVC valve—pentode LF amplifier—pentode output valve. Vibratory interruptor and full-wave rectifier valve for HT supply.* ***Controls.*** — *(1) Tuning and wave range. (2) Volume and on-off switch. (3) Master key.* ***Price***—*17 guineas (including special aerial).* ***Makers.***—*Philips Lamps, Ltd., 145, Charing Cross Road, W.C.2.*

The principle of this aerial system is one of the most interesting features of the set. It is really a half-wave doublet resonating at about 7 metres, which is near the middle of the interference radiation band given off by the majority of car ignition systems. The mid-point at which the aerial lead-in connection is made is a voltage node at the natural frequency of the doublet, but at lower frequencies the aerial functions in the normal manner, even though its effective height may be small. In conjunction with a low-pass filter in the input circuit to the set this arrangement gives complete elimination of ignition noises without having to resort to screened ignition leads or series resistance suppressors which may adversely affect the running of the car.

Noise may also be picked up from the brushes of the dynamo and the high-tension coil of the ignition system, and suit-

Complete circuit diagram. A low-pass filter in the aerial input circuit rejects any residual ignition interference which has not already been cancelled by the special di-pole aerial.

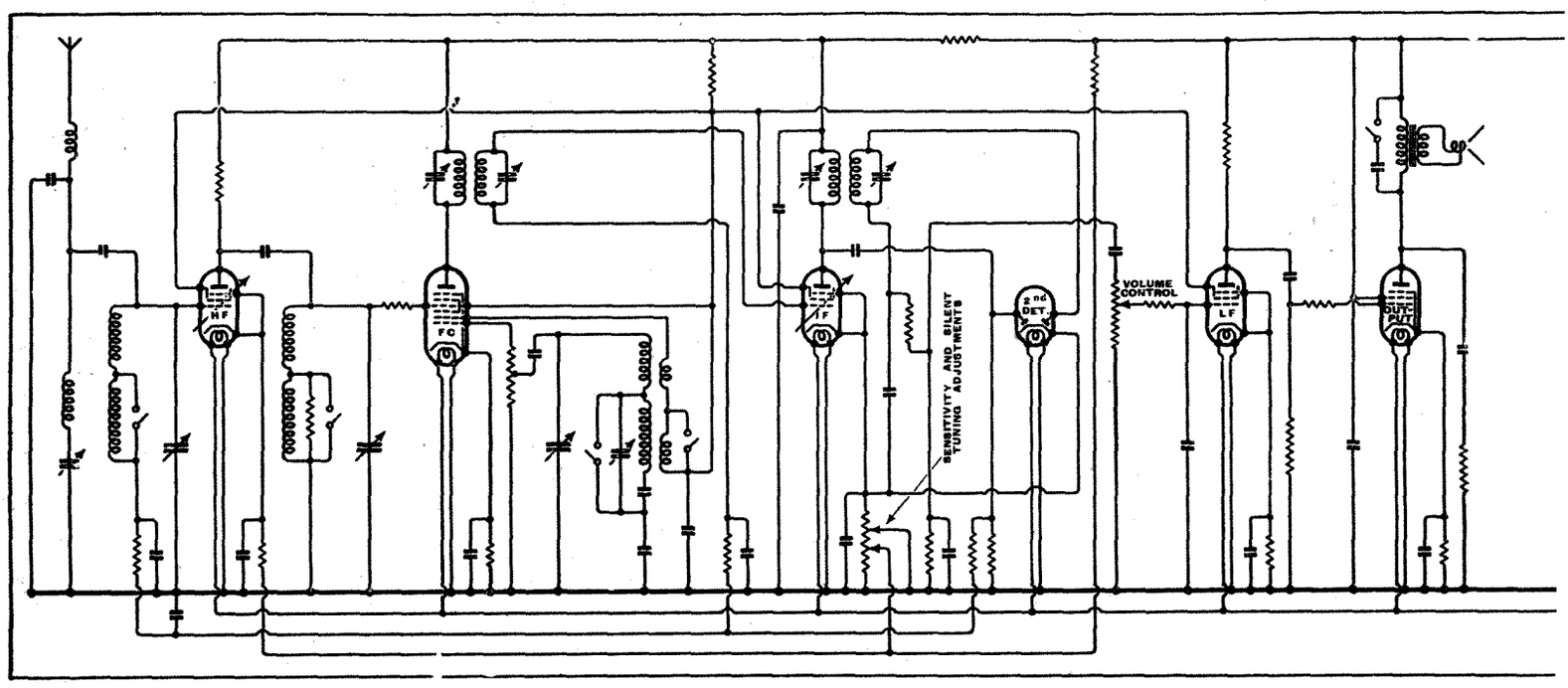

able condensers are supplied with the set to deal with these troubles at the source.

The use of an aerial of such low effective height calls for a correspondingly high sensitivity in the receiver itself. Special valves have been developed for the superheterodyne circuit in which the first valve is a variable-mu pentode HF amplifier. This is coupled through a resistance-fed tuned grid circuit to the octode frequency-changer. The IF amplifying stage is preceded and followed by band-pass filters operating at 115 kc/s, and is a variable-mu pentode controlled, like the similar valve in the HF stage, from the AVC line. A separate double-diode valve provides AVC bias in addition to rectifying the signal. Silent tuning between stations is effected by biasing back the diode from the cathode resistance of the IF stage. This resistance is also used as a source of initial bias for the HF amplifier, and is placed in an accessible position near the top of the set so that the user can adjust both sensitivity and the point at which the silent tuning control comes into operation by means of sliders. The range of the sensitivity control is from 0.1 to 10 microvolts, and the set is sent out adjusted to a sensitivity of 1 microvolt.

High Tension Supply

The detector is followed by a pentode LF amplifying valve, resistance-capacity coupled to an output pentode capable of delivering 2.8 watts to the loud speaker. Fixed tone correction is applied across the anode circuit of the valve, and a further reduction of high-frequency response can be made by connecting an additional condenser on the loud speaker unit.

The valves are designed for operation from a 12-volt lighting system, and the heaters are connected in parallel. High-tension current is derived from a vibratory-type unit which interrupts DC through the primary of a balanced transformer. The frequency of interruption is approximately 80 cycles, and special attention has been given in the designing of the vibrator contacts to prevent sticking and consequent damage to the transformer. The vibrator unit is enclosed in a sound-proof box and is fitted with pins so that it may be replaced if necessary like a valve.

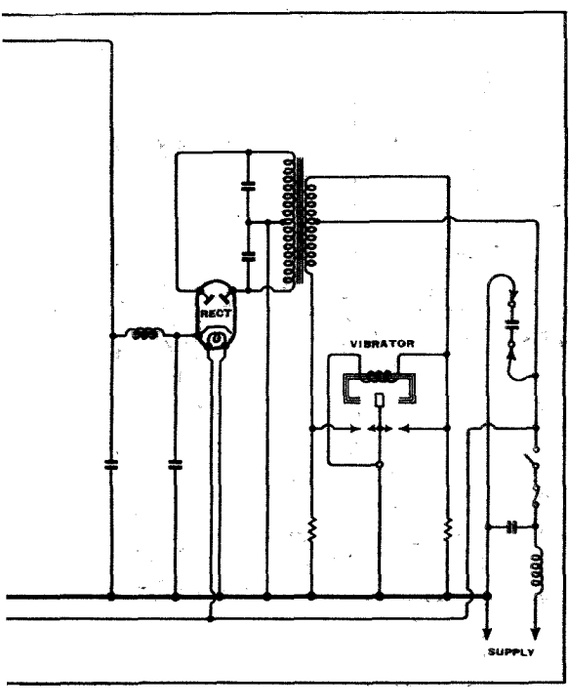

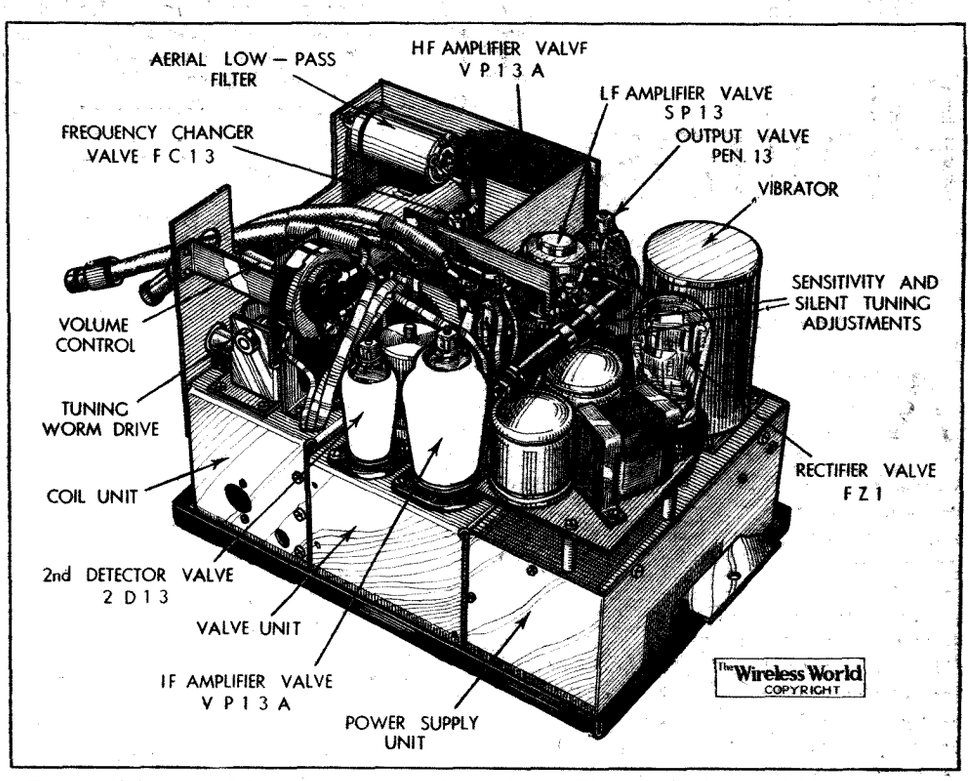

The receiver removed from its outer metal container. The chassis is sub-divided into three separate compartments containing the tuning coils, valves and associated components and power supply and smoothing units respectively.

The stepped-up AC voltage from the secondary of the transformer is rectified by a full-wave valve and smoothed through a conventional filter. As an additional precaution a filter is included in the leads from the supply battery to suppress ripple entering at this point when the battery is run down and of high internal resistance. The HT unit supplies 50 mA at 275 volts and has an efficiency of the order of 65 per cent. The total current taken from the car battery by the set as a whole is 3.1 amps., which is no more than the current taken by a single head lamp.

The set is controlled through flexible cables from a control unit which can be supplied for mounting either on the steering column or on the instrument dashboard. It has a circular wavelength scale which is appropriately illuminated with pilot lamps of different colour on the medium- and long-wave ranges. There are two control knobs, one for volume, which can be locked in the off position by means of the key provided, and the other for tuning. The wave-range switch is incorporated in the latter control, and in order to change from one wave range to the other it is necessary to go to the extremity of the scale and then return on the new wave band.

We were fortunate in being able to give the receiver an extended road test over a route which included many miles of tram-lines and which passed at one point within sight of the aerials of the Brookmans Park transmitters. It may be stated at the outset that at no time was there the slightest trace of any interference which originated in the car itself. Even the electric windscreen wiper, which is often a troublesome source of noise, failed to penetrate the very adequate screening of the equipment. No interference was picked up from the tram track itself, which was of the third-rail type, and it was only occasionally that a tram with badly sparking brushes could be heard in the loud speaker. In any case, the noise was of short duration, and, unless one actually saw the tram pass, the crackle might easily be mistaken for an atmospheric. Occasionally there was a brief rise and fall of hum as the car passed over a buried power cable, but farthur on, when going under some three-wire overhead high-tension cables, no trace of interference could be detected, although it was carefully listened for.

Absence of Fading

The AVC system does its work well as far as can be judged by ear. Steel-framed buildings and bridges on the road had no effect on the volume or quality of the programme. Continental stations like Fécamp and Langenberg provided an ample reserve of volume during the late afternoon, and it was interesting to find that a clear gap, with the automatic silent tuning control fully in operation, could be found between London National and Fécamp with the Brookmans Park aerials in view about a mile away.

The quality of reproduction is a happy

Philips Model 246B—

compromise between the requirements when the car is running and when it is stationary. Under running conditions clarity is of first importance, and a good middle and top register are essential. A full bass response might result in unpleasant resonance in the comparatively small volume of a saloon car, and, in any case, the small dimensions of the baffle box provide rather too severe a curtailment of the lower frequencies. The speaker has, therefore, been designed to give more low-note response than would be required for a domestic receiver, and the result as regards tonal balance appears to be just right for the rather special circumstances under which it performs.

The compact dimensions of the chassis have been achieved by a system of grouping of components into three separate compartments. The first of these contains all the tuning inductances, both HF and IF, and the oscillator coils. On top of this box is situated the ganged tuning condenser, which is driven through a right-angle worm gear. The middle compartment carries all the valve bases with the exception of the rectifying valve, and underneath the base are situated all the valve auxiliary components, such as decoupling resistances and by-pass condensers. Finally, there is the power supply unit with the step-up transformer and smoothing chokes, in addition to the rectifier valve and vibrator. Each of these units forms a completely closed box, so that more than usually good screening between sections of the circuit is achieved.

It is not surprising to find that special care has been taken to provide strong soldered joints, and the cap connections on the tops of certain of the valves are of special design with a strong retaining spring to prevent displacement by vibration.

The set is equally suitable for installation in motor-boats, which are often subject to considerable vibration when running at speed. From start to finish it is a logically conceived and soundly engineered product designed to fulfil extremely arduous requirements.

"Secret" Wireless

OCCASIONALLY a patent which has been earmarked by one of the fighting services as "secret" is, in the fullness of time, released for publication. For instance, the original rejector or "draining" circuit for eliminating interference was in use by the Admiralty as early as 1905, though it was not made public until many years later. A more recent case in point (Patent No. 430330) has just come to light. This, in fact, has a double claim to be labelled "secret," since it is concerned with means for transmitting signals so that they cannot readily be intercepted by an unauthorised listener. The method, which has been withheld from the public since 1923, is based upon an ingenious use of the heterodyne principle.

Two carrier waves of different frequency are radiated simultaneously from the same or from different aerials. Both waves are continually varied in frequency between certain limits, say by inserting synchronised variometers in each aerial circuit, but so that the same difference in frequency exists between the two at all times. There is accordingly present a constant difference-frequency ready to be converted into a beat note once the radiation has been passed through a detector valve at the receiving end.

This, of course, avoids any necessity for using a synchronised variometer to keep the receiving circuits in step with either of the "wobbled" carrier-waves. At the same time it is not possible to receive the message by tuning-in to the difference-frequency. In practice the aerial is kept tuned to the mean of the two carrier-waves, so that each can pass through the detector valve. The output of the latter is permanently tuned to the "beat" or difference-frequency, and therefore functions in much the same way as the IF stage of a modern superhet. Without a knowledge both of the "mean" frequency of the radiated carrier-waves, and of the constant difference between them, a would-be eavesdropper would find it a difficult task to make anything intelligible of the transmitted message.

A NEW RECORD CHANGER

Automatic Adjustment to Record Sizes, from 9 in. to 12 in.

THE first essential of a record-changing device is reliability, and if simplicity of design is contributory to this end then the latest model produced by Messrs. A. Downs and Sons, 25, Ditchling Rise, Brighton, must surely start with a very big advantage.

The mechanism will take any make of record from 9in. to 12in. diameter. The adjustment is automatic, and records may be mixed indiscriminately. The records are supported on a series of vanes extending from two rigid pillars on each side of the turntable. The capacity of the machine is twenty records, and it takes about two minutes to load the instrument to full capacity. When the motor is switched on, the bottom record in the pile is first gauged for diameter by a feeler, which determines the point at which the pick-up arm will descend. Then a pair of pawls push the first vanes aside and drop the record on to a skeleton turntable. This consists of a pair of expanding stirrups, which may be seen in the lower of the two accompanying photographs. Although the contact area is small, the driving force is more than adequate, and if a finger is pressed on to the record the motor will be slowed up without any slip taking place between the record and the turntable.

The pick-up is then lowered gently on to the starting groove through a pneumatic mechanism. It is therefore possible to use Tungstyle needles without fear of bending the points.

When the needle reaches the throw-off groove at the end of the record, the stirrups open and drop the record squarely into a compartment in the base. The air cushion between the records prevents any possibility of damage, and it is a point worth noting that the weight of the rejected records does not have to be taken by the turntable. The process is then repeated, the feeler arm and vane-actuating pawls rising to the height of the next record in the meantime. A control is provided for rejecting records during the course of playing, and the motor is automatically switched off when the last record has been played.

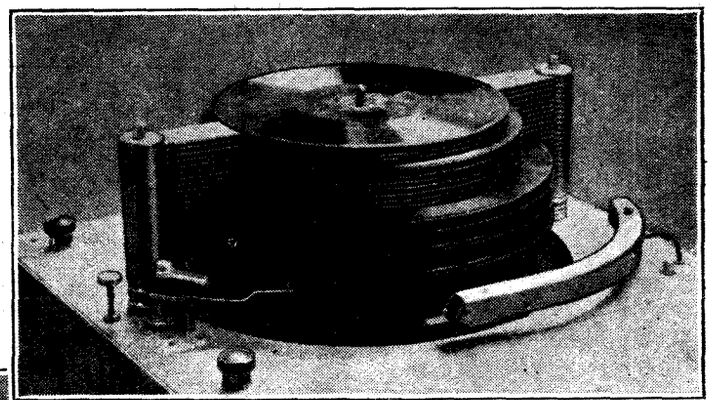

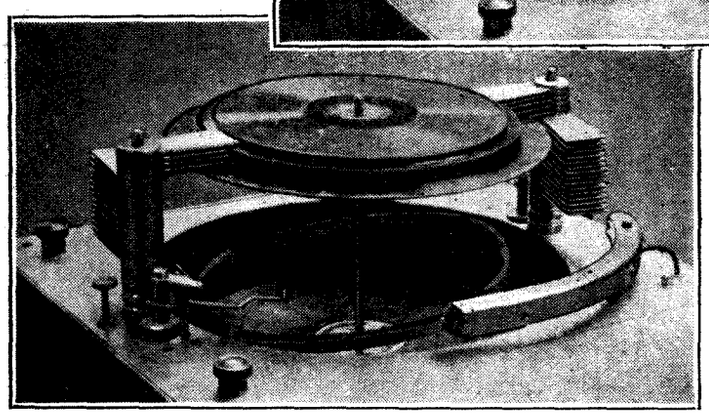

(Above) The magazine fully loaded. Note the feeler which gauges the record diameter and sets the pick-up arm. (Left) A record has just dropped into the "reject" chamber and the stirrups which form the turntable have closed ready to receive the next record.

The motor board of the unit is 15in. square, the depth of mechanism underneath is 18in., and above, 5in.

At the moment the unit is not in commercial production, but we understand that hand-made models are available, including a Collaro motor and piezo-electric pick-up, at a price in the vicinity of £15. It is also proposed to put on the market complete radio-gramophones, incorporating four-valve broadcast and six-valve all-wave superheterodyne chassis, at £28 10s. and 30 guineas respectively.

BROADCAST BREVITIES

NEWS FROM PORTLAND PLACE

New and Better Empire Service

IT is a far cry from the old G5SW aerial at Chelmsford, with which the initial short-wave tests were made in 1927, to the present masts at Daventry which support experimental aerials for transmissions to parts of the Empire, backed up by the several aerial arrays serving other parts; but the 1936 arrangements in their turn will look pretty insignificant when the 1937 Empire Station is completed. An order has been placed by the B.B.C. this week for the erection of five 325ft., two 250ft. and one 150ft. lattice steel masts at Daventry, in preparation for this better Empire service.

Directional Aerials

The new aerial system is to consist of twenty-five directional aerials giving transmission on different wavelengths in thirteen directions, including long and short path routes to Australia and New Zealand. When 5XX was the parent long-wave station of Europe, the Daventry site occupied fifty acres; now it extends to 130 acres.

"Interest" Programmes

A PROPORTION of the forthcoming television programmes is to be devoted to "interest" features, and certain people unfamiliar with the jargon of the film trade are asking whether this means that the remaining features will *not* be interesting. Others are enquiring whether the interest bears some relationship to the capital outlay on the television plant and are assuming that "interest" features will be thrown in as a kind of lookers' bonus.

Entertainment : 50 per cent.

Actually, "interest" films, as Wardour Street knows them, are those concerned with the palatable presentation of hard facts, and here is a splendid field for television.

Plenty of time will be devoted to sheer entertainment—probably 50 per cent. of transmission time each day—but from 20 to 25 per cent. of the output will be concerned with topics of general interest.

Coming Shortly

Already the programme department has listed a number of promising titles, among which may be mentioned the following: the Zoo Day by Day, Cartoonists at Work, Learning to Fly, Physical Training Illustrated, World Affairs, and Makers of Music.

But the field of choice is inexhaustible. Speakers will probably be seen for the first few moments of their discourse and will then be faded out, the screen being occupied by moving or still pictures relating to the subject under discussion.

Incidentally, this method will help to solve the awkward problem of whether television talks should be memorised. Under the suggested scheme it would only be necessary to learn the first few sentences; the rest could be read "backstage."

Lost Visitors

A FUNNY incident at Broadcasting House the other day gave the lie to the oft-repeated tale that the glorious local accents of old England have been disintegrated under the insidious influence of the announcers.

A party of Wiltshiremen were being shown over the "big house" when four of their number got lost. Eventually they encountered an official to whom they tried to explain their plight, but without avail. At length, smarting with indignation, they found their way out of the building. The said official subsequently met the guide, who explained that four of his party had strayed and asked whether the official had seen them. "Yes," said that individual. "Four foreigners, weren't they?"

Organ Prelude

VISITORS to St. George's Hall these days are speculating on the purpose of the two newly-painted and boxed-in balconies on either side of the stage. Actually these have been converted to house the "wonder organ"—its like has never before been seen in church, theatre, cinema or dance hall—and will contain the multitude of pipes ranging in length from sixteen feet to less than an inch, and in diameter from two feet to quarter of an inch.

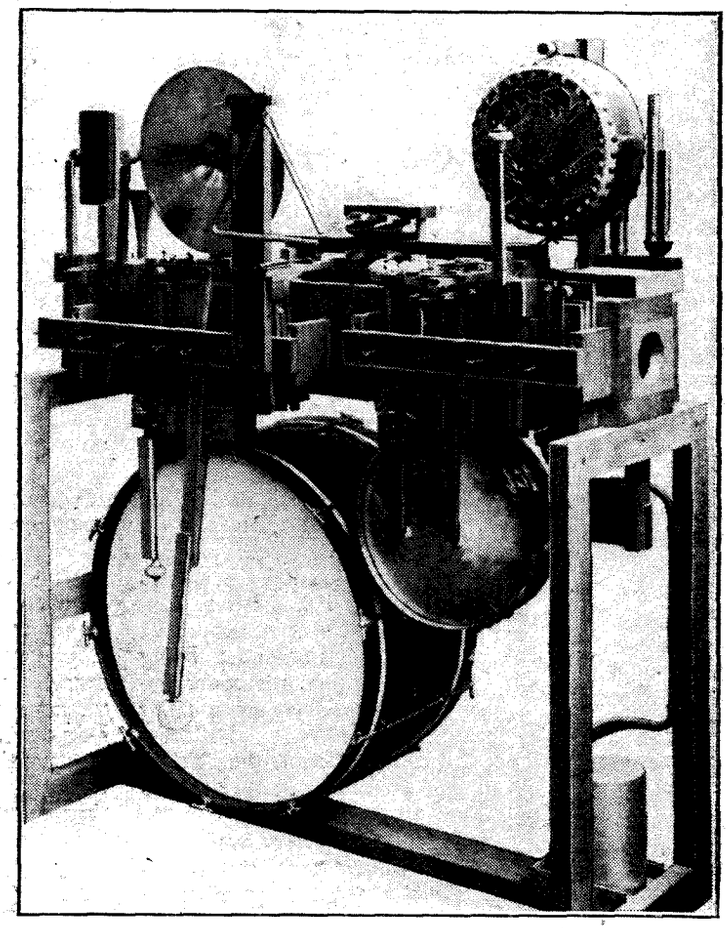

THE "EFFECTS" UNIT to be included in the "wonder organ," now in course of construction at the John Compton Organ Works, which is to be erected in St. George's Hall.

Tambourine and Tom-Tom

The most colourful feature of this organ will be the fancy stops and the "Effects," the latter including a grand pianoforte, various types of drum, triangle, cymbals, castanets, tom-tom, marimba harp, fire bell, whistles, motor horns, tambourine and sleigh bells.

Also, of course, the organ will include the Electrone, which has already been fully described.

Adjusting the Volume

The whole of the organ is to be enclosed in large boxes with minutely adjustable shutters so that every shade of volume can be obtained. Bearing in mind that the instrument will usually be played by guest organists, the builders are making ease of control one of their first objectives. The stop key tabs, of which there will be some two hundred and sixty, will be set out in the most logical order, and to assist in their operation, sixty-seven thumb and twelve toe pistons are being fitted. The console will be movable on a rubber-tyred waggon.

Wanted: A Master Musician

This organ is to be one of the most versatile instruments in existence. Not only will it be available for "legitimate" organ solos; it will be adaptable for use with vocal ensembles and dance orchestras, for light music of the "theatre" type, and for doing everything which comes within the infinitely wide scope of the cinema organ.

In fact, it will call for a new kind of organist—a man combining the scholarly outlook of a cathedral precentor, the catholicity of a revue producer and the slickness of a dance band leader. Where is he?

Alterations at Manchester

ALTHOUGH it is only eighteen months since the new studios were opened at Broadcasting House, Manchester, a drastic alteration is being made in the Number One Studio. A listening room is being constructed in this, the largest studio in Manchester.

It is being built of bricks and glass, and will be soundproof. It will be fitted with a mixing unit and a loud speaker. These will enable a producer to control and, if necessary, combine the output of the various microphones in the studio; while he can listen to the show being radiated through the loud speaker without fear of disturbing the actual broadcast.

During the two months odd that Number One Studio is out of commission the Y.M.C.A. Hall in St. Peter's Street, Manchester, will be used as a temporary studio in its place.

UNBIASED

By FREE GRID

Information Wanted

AT this time of the year you cannot help being conscious of how appallingly old and decrepit is the average person's wireless receiver, for as you sit in your garden you can hear half the programmes of Europe coming from the loud speakers of neighbours who, apart from having the volume control turned up unnecessarily high, thoughtlessly leave their windows up or, worse still, bring their wretched loud speakers into the garden.

The first thing that strikes you about the set is that from the point of view of quality they are all bass and nothing else, thus indicating that they are last year's models at the very least. The next thing that strikes you is the terrible fading on most stations, this indicating that they are older than you at first thought, since they are quite obviously not fitted with AVC. Another thing about them is that very few are protected in any way from electrical interference, either by means of screened aerial downleads or by suitable condensers placed at the point of entry of the mains into the particular household with which they are associated. I have, myself, proved this by "injecting" interference into the electric lighting mains by means of a violet-ray machine and then listening to the racket coming from all the loud speakers in the neighbourhood. This is, of course, a highly effective method of silencing loud speakers when I desire a quiet nap in the garden, and so perhaps I had better not grumble at this particular aspect of their lack of up-to-dateness.

All bass and nothing else

Having all this evidence of the existence of old-fashioned sets forced upon me every evening has set me wondering where all the millions of new sets go to which manufacturers invariably sell during the first few hours of the annual exhibition. I cannot believe that the people who live around me are more lacking in modern radio equipment than their fellow men in other parts of the country. If, however, they are really and truly representative of the average listener, where on earth do these millions of new sets go to every year? I should be interested to know the answer.

A Scurvy Trick

THE great seaside band mystery which I dealt with the other week (19.6.36) has, I am glad to relate, been solved, and it shows the existence of a state of affairs which, even I, accustomed as I am to being brought into contact with the baser side of human nature, did not conceive. You will recollect that several significant incidents had led me to believe that a certain large and straggling combination of seaside resorts at which I was staying were doing down their visitors, and at the same time keeping skilled musicians on the dole by means of a very scurvy trick. This particular corporation possesses many bandstands, and I was led to suspect that the real band was employed at only one of them, the remainder being served from it by wireless methods, the bandsmen in the subsidiary stands being merely living "dummies." Unfortunately, careful observation had failed to reveal to me the presence of either microphones or loud speakers.

Nevertheless, I have been proved right in my suspicions, but the town councillors are far more subtle than I gave them credit for, and I am being torn between two desires, my admiration at their technical skill prompting me to remove my hat, whereas my moral feelings urge me to say and do things not suitable to relate in the columns of this journal. My thanks are due to one of these "dummy bandsmen" who states that in spite of the fact that he earns his living in this way, his better nature has come to the surface as a result of his reading my remarks the other week, and he has resolved to "blow the gaff" even though it may mean the end of his career. It appears that instead of using the old-fashioned method of collecting all the sound from the various instruments in the real band by means of a microphone, mixing them all up on a land line and then re-broadcasting them in this mixed state by loud speakers in the various subsidiary stands, a far better scheme has been adopted.

Each instrument has its own miniature microphone hidden inside it, thin flex running therefrom inside the instrumentalist's clothes and so to a space underneath the stand where there are the necessary micro-wave transmitters, each of which has its own channel of communication in the ether and its own micro-wave receiver in the base of the subsidiary stands. From there flex runs to small specially shaped loud speakers concealed in the various "dummy" musical instrument held in the hands of the make-believe bandsmen.

Unceremoniously ejected

Unfortunately the man who has written to me has no knowledge of the exact wavelengths used, and in spite of the overtime I have put in with a micro-wave receiver I haven't as yet been able to stumble across them. An attempt at bribing an official at the Town Hall merely led, I regret to say, to my being unceremoniously ejected. Needless to say, when I *do* discover the wavelengths used I shall lose no time in rigging up a micro-wave transmitter and the town's visitors can then expect something entirely novel in the way of entertainment.

Tips from Tatts

I SHOULD like to take this opportunity of thanking the unknown philanthropist who from time to time sends me "certs for the 2.30." I fear, however, that gambling in any form is against my principles. In any case, when beer, tobacco, and the other necessities of life have been paid for, there is not, I fear, very much left out of the weekly pocket money which Mrs. Free Grid allows me; at any rate, not sufficient to support a bookmaker in the degree of comfort to which he is accustomed. This must not be taken to mean that I would not indulge in the pastime if I possessed sufficient of this world's goods to overcome my moral scruples. To my mind backing horses is like love and wireless, you never know what is going to happen next. It is the delightful uncertainty which is so fascinating and which, therefore, lures you on until you have got hopelessly out of your depth and are unable to turn back.

HINTS and TIPS

Practical Aids to Better Reception

Declining Detector Emission

WHEN the detector valve of a "straight" set loses its emission, a particularly insidious form of distortion is produced, as the falling-off in quality is gradual. Even in a well-designed receiver the margin of safety is a small one; the maximum output of the detector is usually only just capable of fully loading the output valve.

When emission has fallen off appreciably, the detector is certain to be working in an overloaded condition; that it is doing so may be suspected from the fact that the set does not respond so readily as usual to those controls that alter its sensitivity (reaction, HF valve bias, etc.) after a certain intensity has been reached. Very weak signals may be made stronger by manipulation of these controls, but stronger signals, just below the level required for full output, are not amenable to the usual strengthening process. Again, weak signals may tune very sharply, but the condenser setting for rather stronger ones will appear to be indefinite.

Curing Box Resonance

IT is surprising how often the reproduction of a "boomy" set can be improved by adding a little additional stiffening to the cabinet. Room can always be found inside for one or two wooden battens of about one inch square in cross-section, and it is usually worth while to try fixing these as tightly as possible between the two sides, or top and bottom, of the cabinet. There is no need to spoil the polished exterior by drilling holes through the sides, for the battens may be attached by screws to two blocks which have been previously fixed to the inside walls of the cabinet; the bracing effect will be augmented if the battens are cut and fitted so that the sides are sprung inwards slightly—not, of course, sufficiently to cause actual warping.

It is in the vicinity of the loud speaker itself where bracing is most required, and the stiffening of this region can be made even more effective by using a fairly wide batten in the manner just described and fixing it in such a way that it is under slight tension against the field magnet, and thus exerts pressure against it, holding it tightly in position up against the baffle.

Comparative tests can most easily be made by using a standard speech transmission, such as the news bulletin.

Cutting Sheet Metal

EVEN with the best of tools, the cutting of sheet metal is none too easy a task for the amateur. So far as material of the thickness and relative softness generally used for chassis and base plates is concerned, it is probably safe to say that one would generally do better to eschew the snips of the professional worker and to adopt a plan already suggested in these columns. By making a deep score with a scriber guided by a straight edge, it is possible to make a clean break through the metal, which will require only a slight touching-up with a file.

A better appliance than a scriber is the hook-like engraving tool shown in operation in the accompanying illustration. As will be seen from the inset, the business end is shaped rather like that of a gooseneck lathe tool.

How to use a graving tool for cutting sheet metal.

These tools do not seem to be very readily obtainable, but they are quite easily made from a piece of silver steel.

Local Interference: An Unusual Kind

INCREASING popularity of all-wave reception is bringing home to an ever-widening circle the fact that the short waves, although they may be basically of the same nature as those with which we are more familiar, are apt to manifest some puzzling idiosyncrasies.

It is not widely known that short-wave receivers are subject to a puzzling form of interference to which others are almost immune. In the accepted sense, this interference is not electrical, nor is it directly man-made.

In general, the form of interference in question sounds rather like atmospherics, but it generally gives rise to scratching sounds. Careful observation will show that the noises generally coincide with vibration, such as might be caused by the passing of a heavy motor vehicle, or even by somebody moving about the house. Such troubles are due to imperfect contacts between loose metal objects in the vicinity of the receiver or aerial.

A Microphony Tip

WITH the increasing popularity of the all-wave set, it is inevitable to come up against cases of microphonic howling on the shortest wavelengths. Microphony is apt to be something of a problem with the conventional self-contained type of table receiver, owing to the close acoustic relationship between the chassis and the loud speaker. The ganged condenser is by far the most vulnerable point, but as this is almost certain to be already mounted on very flexible rubber bushes, there is nothing more that can be done by the amateur.

The valves might well repay attention, however, and there is one "wrinkle" used with great success in the very early days that should be tried; this is to enclose the most sensitive valve—with straight sets the reacting detector, but in superhets invariably the oscillator—in a length of cycle inner-tube. It may also be found helpful to stand the complete set on a mat of soft sponge rubber. If neither of these suggestions should prove effective, there still remains an obvious solution which is often overlooked—the adoption of a separate external speaker instead of the built-in one.

Listeners' Guide for the

THE INLAND WATERWAYS OF ENGLAND are featured in the Regional programme at 8.45 on Monday. A typical scene on the Grand Junction Canal at Watford is shown above.

THE beauty, colour and rhythm of the waterways has always appealed to producers whether of film, stage or radio, and it is therefore meet that the B.B.C. should attempt to picture *via* the microphone the strength and value of these waterways. In a programme from the Regional transmitter on Monday at 8.45 under the heading "The English Canal," an endeavour will be made to give listeners an idea of the workings on these inland waterways. What is of common occurrence to those who live in close proximity to rivers and canals will prove of more than ordinary interest to those unacquainted with river life. This forty-minute programme commemorates the 200th anniversary of the death of the Duke of Bridgewater, who cut the first canal in England, the Worsley - Manchester Canal, locally known as the Bridgewater Canal.

In view of Lord Gainford's Bill in the House of Lords on River Pollution a discussion on this subject is topical. At 8 o'clock on Tuesday from the Regional transmitter J. Inglis Spicer, Clerk and Chief Inspector of the Trent Fishery Board, will speak for the Conservators and William Prescott for the Industrialists, with Alderman Sir Albert Atkey as Chairman, in a debate, "Fisherman's Water or Factory Drain?" This will deal with river pollution and its effects on fishing and the countryside.

SPORT AD INFINITUM

A ROUND of sport will be enjoyed by listeners to the National programme on Saturday from 4.25 to 5.20. From the White City, Harold Abrahams will comment upon the A.A.A. Championships. The King's Cup Air Race will also be dealt with from Hatfield Aerodrome by Ivor McClure, who gave a talk on "Making Flying Safe" in the series "Conquest of the Air." Lt.-Comdr. R. Woodrooffe will give a commentary from Lord's on the Eton-Harrow Cricket Match.

HILDEGARDE

THIS famous American diseuse, before going back to America, will broadcast for ten minutes by herself a cycle of songs at 7.50 (Nat. and Reg.) to-night (Friday) and will again appear on Monday with Henry Hall and the B.B.C. Dance Band at 8.45 (Nat.).

SHAKESPEARE

THE Stratford-upon-Avon Festival Company will give their first broadcast in the National programme at 9 on Sunday, when they will be heard in B. Iden Payne's production of "Much Ado About Nothing" arranged for broadcasting by Howard Rose. Anthony Bernard will conduct the Memorial Theatre Orchestra in the Incidental Music which he has composed. The scene of the play is laid at Messina in and near Leonato's house, and later in a church and prison.

FROM THE CHILDREN'S HOUR

THE quality and entertainment value of the Children's Hour programmes is often the subject of appreciative correspondence received at Broadcasting House. It may be due to this that the lighthearted fairy-tale "The Charcoal-Burner's Son," which was first performed in the Children's Hour, is to be given in the main programme on Monday at 8 (Reg.) and again on Wednesday at 10 (Nat.). Derek McCulloch, who is in charge of the Children's Hour, will produce this tuneful operetta, the book of which is by L. du Garde Peach and the music by Victor Hely-Hutchinson. The cast, which is a strong one, includes Stuart Robertson, Malcolm McEachern, Leslie French, Reginald Purdell and Mary O'Farrell.

GENTLEMEN v. PLAYERS

RUNNING commentaries from Lord's on the match between Gentlemen and Players will be given by P. G. H. Fender at 1-1.15 and 5-5.15 in the Regional programme on Wednesday and Thursday.

FOREIGN RELAYS

THREE foreign relays come into this week's programmes. The first to-night (Friday) comes from Cracow, when the Polish Broadcasting Symphony Orchestra, conducted by Gzgegors Fitelberg, and a mixed choir, will give a concert of Polish music from the Royal Palace of Wawel, Cracow, which will be relayed Regionally at 8.15. The second is from the World's Sunday School Congress, now being held in Oslo, from whence Dr. Toyohiko Kagawa will give a talk on "Saving the World Through the Child" in the National programme at 5 on Sunday. The third will also be on Sunday, at 6.15 (Reg.), when the Deutschlandsender Orchestra and Nettelmans' Band, with Elfriede Harder (harp) and Hans Metzler ('cello), will give a programme of light music entitled "Melody and Rhythm," from Berlin.

HYDE PARK "O.B."

FOR those who are able to listen during the morning an impressive "O.B." will be given from 11 a.m. to 12.15 on Thursday from the National transmitter. It will be the occasion of the Presentation of Colours by His Majesty the

BARBARA COUPER, who is the wife of Howard Rose, the B.B.C. Drama Director, is this year's leading lady of the Stratford-upon-Avon Festival Company. She plays the part of Beatrice in "Much Ado About Nothing" to be broadcast nationally at 9 on Sunday.

Week

Outstanding Broadcasts at Home and Abroad

King to the 1st and 3rd Battalions Grenadier Guards, 1st, 2nd and 3rd Battalions Coldstream Guards, and the 2nd Battalion Scots Guards. The presentation will be accompanied by a short service of consecration. Major J. B. S. Bourne-May (late Coldstream Guards) will give a description from Hyde Park—the scene of this spectacular ceremony.

◇ ◇ ◇

"THE GHOST TRAIN"

THIS thriller of the stage and screen should prove an exceptionally good subject for broadcast adaptation. The action of this play by Arnold Ridley takes place in the dimly lit small General Waiting Room at Fal Vale, a wayside station on the South Cornwall Joint Railway, during the course of four hours. The adaptation has been carried out by Howard Rose, who is also the producer. The cast will include Mabel Constanduros, Jack Melford, Joan Harker, Clifford Evans and Joan Matheson. "The Ghost Train" will be broadcast at 8 on Thursday (Reg.) and again on Friday, July 17th (Nat.).

◇ ◇ ◇

HOT v. COLD

LISTENERS will undoubtedly be interested, if only by reason of England's changing temperature, in the discussion between two explorers entitled "Hot *v.* Cold," on Saturday at 8 regionally. Tom Harrisson will speak for the Tropics and Edward Shackleton, son of the famous explorer, for the Poles, with Maurice Healy in the chair.

◇ ◇ ◇

OPERA

ADAM, Mozart and Wagner open the week's opera broadcasts. To-night (Friday) Vienna is giving Adam's classic comic opera "If I Were a King" at 7.30, and at 8.30 from Leipzig will be heard Mozart's "Cosi fan tutte," whilst at 8.15 a recorded version of "The Valkyrie" comes from Bucharest.

At 8.30 on Saturday Paris PTT is taking Debussy's five-act opera "Pelléas et Mélisande" from Vichy Casino. From Milan, Sottens and Monte Ceneri at 8.45 comes "L'Amico Fritz" by the still-living doyen of Italian composers, Mascagni.

An opera of the contemporary Italian composer, Pedrollo, will be heard twice this week. It is "L'uomo che ride," based on Victor Hugo's "L'Home qui rit," which will be heard from Rome at 8.45 on Sunday, and again at the same time on Tuesday from Milan.

Classical opera and operetta music with arias by Ingeborg Steffensen constitute a programme at 8 o'clock from Kalundborg on Sunday.

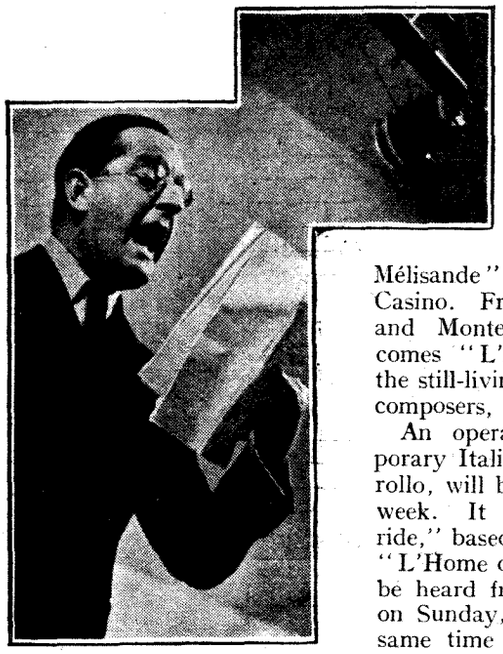

IN FULL CRY. Stanley Holloway, who is the guest star artist in the "White Coons" programme on Wednesday and Thursday.

◇ ◇ ◇

BIRTHDAY PROGRAMME

A GALA performance on the eve of Franz von Blon's 75th birthday will be given from Berlin at 8.45 on Wednesday. A programme of his own works will be given when he conducts the Station Symphony Orchestra.

◇ ◇ ◇

REGIMENTAL MARCHES

OLD Saxon and Thuringian military marches incorporating those of most of the well-known Saxon regiments will be played in the programme from Leipzig and Deutschlandsender at 8 on Sunday.

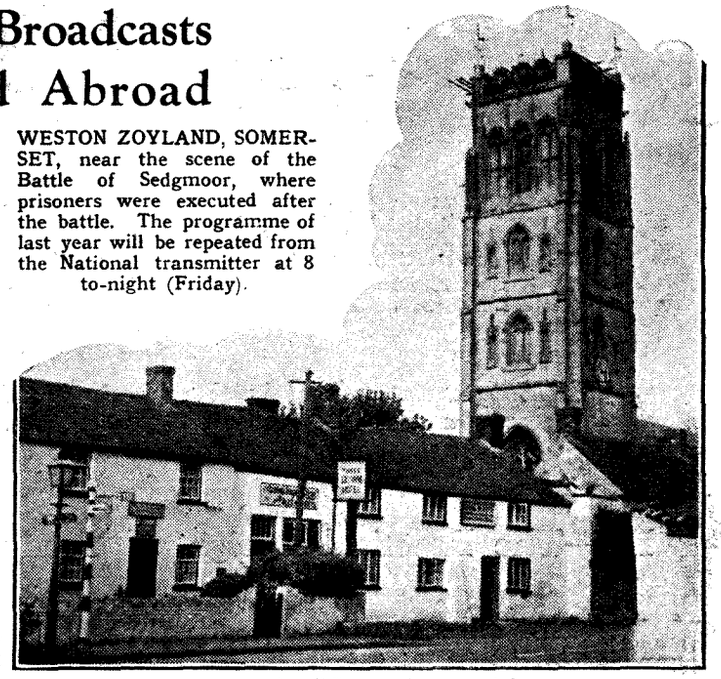

WESTON ZOYLAND, SOMERSET, near the scene of the Battle of Sedgmoor, where prisoners were executed after the battle. The programme of last year will be repeated from the National transmitter at 8 to-night (Friday).

◇ ◇ ◇

"A STORY IN SONG"

THE programme under this heading emanates from the Deutschlandsender at 8.30 on Tuesday, and has been compiled by Peter Paul Althaus and consists of choruses from well-known dance numbers set in a sequence to give a narrative in song.

THE AUDITOR.

HIGHLIGHTS OF THE WEEK

FRIDAY, JULY 10th.

Nat., 7.50, Hildegarde. 8, Sedgmoor Feature Programme. 8.50, Recital: Madeleine Grey (soprano) and Francis Poulenc (piano).

Reg., 8.15, A Polish Concert from Cracow. 8.55, Bruce Sievier's "The Silver Patrol."

Abroad.

Radio-Paris, 8.45, Concert by the Conservatoire Prize Winners of 1936.

SATURDAY, JULY 11th.

Nat., 4.25–5.20, Relays from the White City, Hatfield Aerodrome and Lord's. 8.30, Music Hall.

Reg., 8, "Hot *v.* Cold," Discussion between Two Explorers. 8.30, The London Symphony Orchestra. Conductor: Julius Harrison.

Abroad.

All French Stations, 8.30, Concert for the Congress of the Fédération Nationale de Radio-Diffusion from the Casino Park, Uriage-les-Bains.

SUNDAY, JULY 12th.

Nat., The Wingates Temperance Band. 7.55, Service from St. Martin-in-the-Fields. 9, The Stratford-upon-Avon Festival Company in "Much Ado About Nothing."

Reg., 5.20, Recital: Stiles-Allen (soprano) and Thelma Reiss ('cello). 6.15, Melody and Rhythm—Light Music from Berlin. 9, The Scarborough Spa Orchestra. Conductor: Kneale Kelley.

Abroad.

Munich, 8, "Magic of the Human Voice," Concert, with Erna Berger (soprano) as soloist.

MONDAY, JULY 13th.

Nat., The Café Colette Orchestra. 10.15, Chamber Music: Charles Draper (clarinet), William Primrose (viola) and Angus Morrison (piano).

Reg., 8, "The Charcoal-Burner's Son"—operetta. 8.45, "The English Canal."

Abroad.

Frankfurt, 8.10, Musical Variety Programme from Cassel.

TUESDAY, JULY 14th.

Nat., "Camp Fire on the Karroo," Joseph Marais and his Bushveld Band. 9, Pianoforte Recital: Franz Reizenstein.

Reg., 8, Discussion: "Fisherman's Water or Factory Drain?" 8.30, Harrogate Municipal Orchestra.

Abroad.

Stuttgart, 10.30, "German-Finnish Youth Songs." Recordings from Helsinki.

WEDNESDAY, JULY 15th.

Nat., "White Coons." 8, Concert of Modern Music. 10, "The Charcoal-Burner's Son."

Reg., Eddie Carroll and his Music. 9, The B.B.C. Singers (B).

Abroad.

Berlin, 8.45, The Station Symphony Orchestra, conducted by Franz von Blon.

THURSDAY, JULY 16th.

Nat., 11 a.m.–12.15, Presentation of Colours by His Majesty the King to Guards. 8, "White Coons." 10.20, Ethel Barlett and Rae Robertson.

Reg., 8, "The Ghost Train." 9.15, B.B.C. Theatre Orchestra.

Abroad.

Leipzig, 8.10, Concert from the Reich Flower Show, Dresden.

High-pass and Low-pass Filters

SIMPLIFYING THE PROBLEM OF DESIGN

By A. L. M. SOWERBY, M.Sc.

THIS instalment deals at length with the practical problem of designing a scratch filter, such as might be used in a gramophone amplifier, and also contains a summary of rules.

IV.—The Practical Design of Composite Filters

HAVING designed two simple filters, let us try our hand at something harder. We wish to insert, at X in Fig. 13, a "scratch filter" cutting sharply at 5,000 cycles. Specification: attenuation at 4,500 cycles not to exceed 4 db., but to exceed 30 db. for 5,500 cycles and all higher frequencies.

First, we look at the circuit into which the filter is to be fitted. On one side a 10,000-ohm valve, on the other a 50,000-ohm resistance. For the sharp cut-off we have stipulated accurate matching is necessary, and the same filter cannot match both 10,000 and 50,000 ohms. We therefore reduce the anode resistance to 15,000 ohms, which is also about the value that the A.C. resistance of the valve will have in working conditions. (But it would be better to establish exact values from the valve curves.) Now we can take 15,000 ohms as the value of R in designing the filter.

Since, for the sake of sharp cut-off, we shall terminate with a pair of m-derived

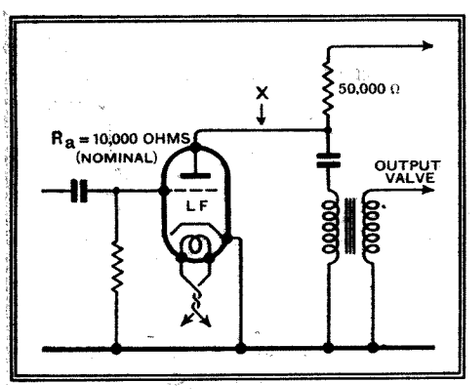

Fig. 13.—An LF amplifying circuit. It is desired to insert, at point X, a scratch filter cutting sharply at 5,000 c/s.

half-cells for which $m=0.6$, we may take the attenuation-curve of this cell as a basis. From Fig. 11 we see that the cell gives 1 db. attenuation at 4,500 cycles ($=0.9\ f_c$), while at 5,500 cycles ($=1.1\ f_c$) it gives 15 db., or half the required figure. It rises to over 30 db. at 6,250 cycles ($f_\infty=1.25\ f_c$) but afterwards falls away to 13 db. at 15,000 cycles, which is about the highest frequency we need bother about. We are therefore left to find, for the rest of the filter, a combination that gives not less than 15 db. at 5,500 cycles, and not less than 17 db. at 15,000 cycles.

Examination of Fig. 11 shows that a prototype cell gives only 7 db. at 5,500 cycles, which is not enough. All the m-derived cells, no matter what value of m be chosen, fail at one end or the other—though the specification laid down can be very nearly achieved by a cell for which $m=0.55$ or thereabouts. But no one cell, in addition to the cell used in halves for terminating, will quite meet the conditions laid down.

The Odd Cell

Will $2\frac{1}{2}$ cells do? Since a filter containing an odd number of m-derived half-cells will only fit together at the cost of losing correct termination at one end, the odd half-cell *must* be a prototype. If we add the attenuation due to our one m-cell to half that of a prototype, we get the curve of Fig. 14*a*. Quite a good filter, but not sharp enough in cut-off, and failing rather in attenuation round about 9,000 cycles. Inspection of the curves of Fig. 11 tells us that any cell there shown will give the extra 4 db. still required to make up the stipulated 30 db. at 9,000 cycles; we can therefore add a cell of $m=0.4$ or so, which gives small, but sufficient, attenuation at the higher frequencies, and offers us a very sharp cut-off. Taking $m=0.417$, for which we have a curve, and adding its attenuation to that of the $1\frac{1}{2}$ cells already chosen, we arrive at the final curve of Fig. 14*b*, which handsomely meets our original requirements.

Now to design it. We have the data: R = 15,000 ohms, $f_c=5{,}000$ cycles. This gives us, for the prototype filter, L = 0.955 H. and C = 0.00425 μF. By applying the chosen values of m (0.60 and 0.417) and the corresponding values of n from Fig. 9 (0.267 and 0.50) we arrive at the following complete table of results:

Cell.	Values.	
Prototype.	L = 0.955 H.	C = 0.00425 μF.
$m=0.6$	$L_1=0.573$ H.	$L_2=0.255$ H.
($n=0.267$)	$C_1=0.00114$ μF.	$C_2=0.00255$ μF.
$m=0.417$	$L_1=0.398$ H.	$L_2=0.478$ H.
($n=0.50$)	$C_1=0.00212$ μF.	$C_2=0.00178$ μF.

A little experiment will show that the five half-cells will only fit together in two ways. We have to keep the two half-cells for which $m=0.6$ at the ends, and the other m-cell cannot be split. All we can vary, therefore, is the position of the prototype half-cell. The two possible arrangements are shown at *a* in Figs. 15 and 16.

Comparisons of these shows that when

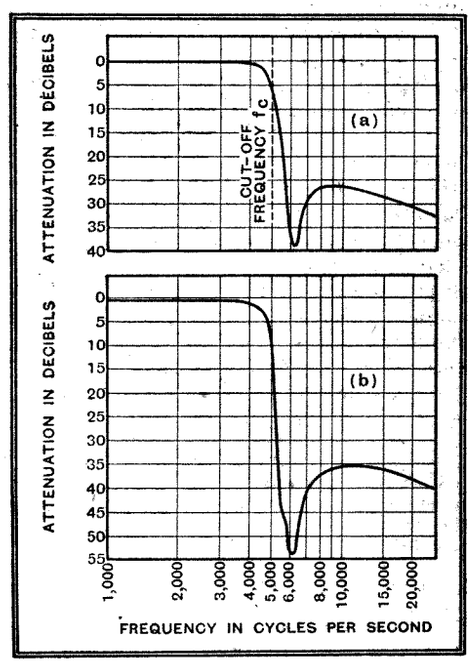

Fig. 14.—Response curves: (*a*) one m-cell for which $m=0.6$, and a prototype half-cell; (*b*) final filter, consisting of two m-cells ($m=0.6$ and $m=0.417$) and a prototype half-cell.

the half cells are joined up the arrangement in Fig. 15 will require four coils as against the five required for Fig. 16; we therefore choose the former. The process of finding the final numerical values by joining up the half-cells is shown at *b* and *c* in Fig. 15; at *b* numerical values are inserted, but no joining-up is done except for linking the two adjacent half-cells for which $m=0.417$. At *c* is shown the completed circuit, with values obtained by adding

High-pass and Low-pass Filters—

those at the junctions. Fig 16 is also shown completed, the intermediate step being left out. The reader may like to check, with the aid of the values for the various filter-elements, the correctness of the numerical values in 16*b*. With their different circuits and their different values it is hard to believe, until one has seen how they are built up, that the two filters of Fig. 15 and 16 could possibly have identical characteristics.

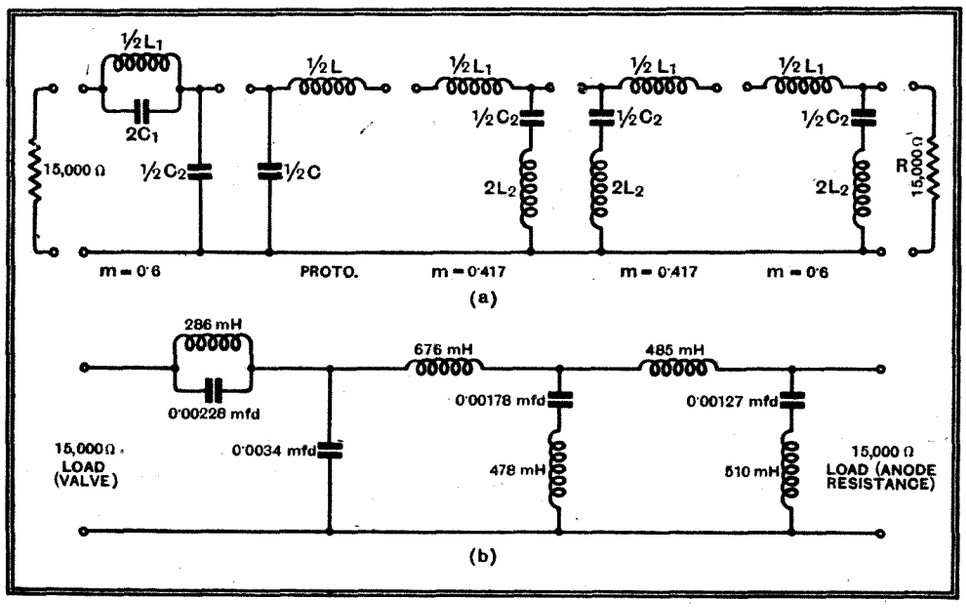

Fig. 16.—(*a*) The other possible arrangement of $2m+\frac{1}{2}$ proto; (*b*) practical form of filter built up as at *a*.

Particular attention is drawn to the apparent disappearance of the prototype half-cell, whose components have in each case been swallowed up by the like components of adjacent half-cells. The completed circuit gives the impression that an illegitimate π-to-T junction has been made; it is only by examining the actual numerical values allotted to the coils and condensers that the correctness of the filter can be demonstrated.

SUMMARY.

1. Any two half-cells, of the same cut-off frequency f_c and designed for the same load-resistance R, may be joined, provided that at the junction the two arms meeting are alike in structure.

2. Where regular impedance round f_c—which in practice means sharp cut-off—is important, terminate with *m*-derived half-cells for which $m=0.6$ or thereabouts. Points B (Figs. 5 and 6) to be at ends of filter.

3. The two ends of the filter must work into load-resistances of the same value R. Laxness here means un-sharp cut-off and attenuation in the pass-region near f_c.

4. Half-cells of different f_c count as separate filters, and can be joined, whether in series or parallel, only through the correct buffer impedance.

5. The form of the filter gives a rough idea of its impedance in the "stop" region; this may have to be taken into account in fitting a filter into a circuit. The value R holds over the pass-region only.

6. In designing a prototype low-pass filter for HF work, always work out in addition the value of C_1 for some mean value of *m*. Unless this is very considerably greater than the probable value of the self-capacity of L in the prototype, the filter will be disappointingly ineffective.

7. If too exacting a specification is set for a filter, impractical values of components will result from the calculation. The usual cure is to modify the circuit in which the filter is to work in such a way as to provide much lower terminating resistances.

8. Never try to make a filter of iron-core coils; their resistance is many times too high. (Dust-cores probably excepted.)

9. In preparing these articles, the writer has had much help from "Les Filtres Electriques," by Pierre David (Gauthier-Villars, Fcs. 50). This book is strongly recommended to the reader who wishes to delve deeper into the subject. It is written in very easy French.

(The concluding instalment will deal with some practical difficulties encountered in filter design.)

The Electrical Handicraftsman and Experimenter's Manual. By H. R. Langman and J. H. Moore. Pp. 192 and 187 sketches. The Technical Press, Ltd., 5, Ave Maria Lane, London, E.C.4. Price 7s. 6d.

HAVE you ever delved into any of those remarkable works, the typical nineteenth-century books of Popular Science? They exercise a strange and irresistible fascination, with their naïve elegance, their "Curious and Ingenious Contrivances," and their remoteness from the busy sordid world. It is a type which one had thought long extinct.

Yet here it is once more, dated 1936! The very same in subject, in style, and in the myriads of lettered sketches (though officially numbering 187, there must be at least a thousand of them); in fact everything is here but the heavy leather binding.

These remarks must not be taken to imply that the volume is out of date; it does, in fact, include many thoroughly modern devices—such as synchronous electric clock motors—in company with "Engines" by Negro, Jacobi, and other ancients.

The amateur inventor will find a storehouse of suggestions for the details of his construction, such as the "Forty-Seven Contacting Devices"; and the teacher of elementary electrical engineering is provided with scores of models for demonstrating fundamental principles. Radio is barely touched.

Such a work can hardly avoid being a trifle inconsequent, but the authors have supplied an index as well as a detailed list of contents. In a future edition one would like to see more definite data given in the tables of condensers, solenoid and transformer windings, and in wire tables. Such added particulars as capacities, resistance, current, turns per inch, etc., would be helpful.

M. G. S.

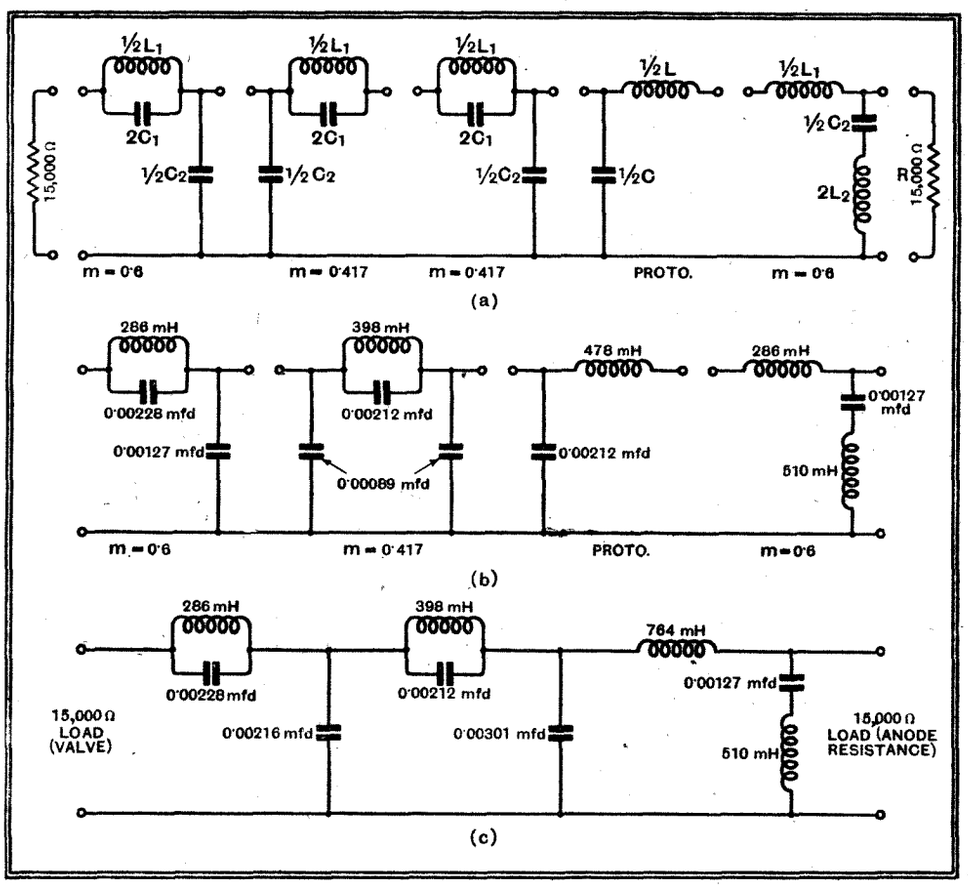

Fig. 15.—(*a*) shows one of the two possible arrangements of five half-cells, ($2m+\frac{1}{2}$ proto); (*b*) repetition of *a*, with intermediate *m*-cell completed and numerical values inserted; (*c*) practical form of filter, with adjacent impedances fused at the cell junctions.

On the Short Waves

NOTES FROM A LISTENER'S LOG

PERHAPS one of the important things which has happened in short-wave broadcasting during the past year or two is the manner in which the Latin-American republics have adopted the 6 megacycle, and, lately, also the 9 megacycle band, for what are almost essentially local broadcasting services.

No doubt many of the stations in question are, apart from their local listeners, deeply interested in their fan mail from more distant listeners, but the fact remains that in nearly all cases the power used by these stations is insufficient to secure consistent programme value reception at any great distance.

Their use of the international broadcasting bands, for a strictly local service, raises new and difficult problems for the serious international broadcasting organisations, such as the B.B.C.'s Empire Service and the German Kurzwellensenders, whose stations must make use of the 6 megacycle band in winter for serving North and Central America.

To give some idea of the extent to which this problem has grown, I give below a list of Latin-American stations measured during the past few days.

Station.	Call.	Frequency.	Wavelength (approx.).
San Christobal ...	YV10RSC	5.718 Mc/s	52.4 m.
Medellin	HKC	5.763 ,,	
Caracas	YV2RC	5.804 ,,	
Maracaibo ...	YV15RMO	5.851 ,,	
Bucaramanga ...	HJ2ABD	5.987 ,,	50.12 m.
Guatemala ...	TG2X	5.943 ,,	
Port au Prince ...	HH2S	5.910 ,,	
Barquismeto ...	YV8RB	5.894 ,,	
Tegucigalpa ...	HRN	5.875 ,,	
San Pedro Macoris	HI1A	5.863 ,,	
Colon	HP5K	6.005 ,,	50.0 m.
Havana	COCO	6.008 ,,	
Bogota	HJ3ABH	6.012 ,,	
Trujillo	HI3U	6.017 ,,	
Santa Marta ...	HJ1ABJ	6.027 ,,	
Bogota	HJ3ABD	6.055 ,,	
Cali...	HJ5ABD	6.086 ,,	
Manizales	HJ4ABB	6.106 ,,	
Bogota	HJ3ABX	6.125 ,,	
Habana	COCD	6.127 ,,	
Barranquilla ...	HJ1ABB	6.129 ,,	(? HJ1ABC)
Santiago	CO9GC	6.146 ,,	
Cali...	HJ5ABC	6.152 ,,	48.8 m.
Tunja	HJ2ABA	6.171 ,,	
Bogota	HJ3ABF	6.175 ,,	
Trujillo	HIG	6.280 ,,	
Maracay	YV12RM	6.298 ,,	
Trujillo	HIZ	6.308 ,,	47.5 m.
Santiagos de los Caballeros	—	6.393 ,,	
Caracas	YV9RC	6.398 ,,	
San José	TIGPP	6.409 ,,	46.8 m.
Trujillo	HIL	6.498 ,,	
San José	TIRCC	6.546 ,,	45.8 m.
Trujillo	HI4V	6.557 ,,	
Trujillo	HIT	6.630 ,,	
San José	THEP	6.701 ,,	44.8 m.
Trujillo	HI7P	6.802 ,,	
Georgetown B.G....	VP3MR	7.075 ,,	42.5 m.

The list given above should prove useful to many enthusiasts, for, in spite of their relatively low power, under favourable conditions some of these stations produce a readable signal in this country.

It should be noted that in Trujillo City, D.R., there are seven stations alone, Bogota, Columbia, coming second with four. There may, of course, be others which have not yet been identified in this country, but I think the list given above is fairly complete.

The multiplication of these stations has also given rise to speculation regarding the future of short-wave broadcasting in the U.S.A., where it is now proposed that no station having a power of less than 20 kw. shall be allowed to operate in the international short-wave bands.

It is felt that stations having aerial powers of less than 20 kw. would not be able to provide a worth-while distant service, even if directional aerials were employed, and so would needlessly occupy valuable space in the ether.

It remains to be seen what the solution to this problem will be, whether new channels will be found for these stations on lower, or perhaps ultimately on the ultra-high, frequencies, in order to secure clear-channel operation for important world broadcasters.

Ultra-short Waves

One reads a lot nowadays about amateur 56 Mc/s activity, but although situated in south-west London I must record an almost complete absence of signals on this band as far as I am concerned. Only one crystal-controlled signal, G5LB, has been heard in any case, so perhaps my superhet is too sharply tuned for good results, except from car ignition systems.

The best and most consistent ultra-high frequency signals heard are, in order of signal strength, the Baird sound and vision signals, and the landing beacon at Heston Airport, but even the very strong signals from the Crystal Palace are not strong enough to override all car ignition interference.

Sunspot activity has been quite marked again during the fortnight under review, and on Monday, June 22nd, the half-wave of WAJ on 26 Mc/s was fairly strong at 7.30 p.m., the half-wave of Moscow on 24 Mc/s also being strong, but with very bad quality a little later.

A feature of the past week or so has been the surprisingly good performance of W2XAD, 15.33 Mc/s, on his extended schedule, and this station, except on rare occasions, is now giving a better performance than W8XK on 15.21 Mc/s. Strangely enough, W2XAF on 9.53 Mc/s has also taken on a new lease of life, and has been a good signal, too, before midnight on quite a number of evenings.

A case in point, W2XAD was an excellent signal all Monday evening, with W3XAL fairly good on 17.78 Mc/s, whilst quite a number of telegraph stations between 20 and 17 Mc/s were showing round-the-world echo.

The skip-distance seems to have been particularly short over the week-end of June 21st, on which date I had a short 'phone QSO with a station in Bradford on 14 Mc/s—quite an unusual feat, with R9 signals both ways.

Strong signals from W2XAD were again a feature on Wednesday evening, with TPA3, Paris, on 11.885 Mc/s coming in at local-station strength at 6.45 p.m. Evidently the large groups of sunspots were making their presence felt.

Among the better signals on Thursday evening, June 25th, were PRF5 on 9.50 Mc/s at 11.30 p.m. (plus a heterodyne from HJU?), W2XAF, definitely very good at this time, with no interference and SM5SX on 14 Mc/s calling URAD; W2XAD was also very strong, but somewhat too lightly modulated.

Very good results were also obtained from W2XAF at 11.20 p.m. on Saturday evening, being about equal to W2XAD at this time owing to a noteworthy absence of noise and static on 9 Mc/s on this occasion.

Very strong signals were also intercepted from HBL and HBP, the League of Nations' stations on 9.595 and 7.797 Mc/s respectively, during their trilingual weekly bulletin broadcast, which starts at 11.30 p.m. on Saturdays. Sunday, too, saw good results from all the regulars, except that VK2ME was quite poor at 6.30 p.m. LZA, Sofia, on the other hand, was quite

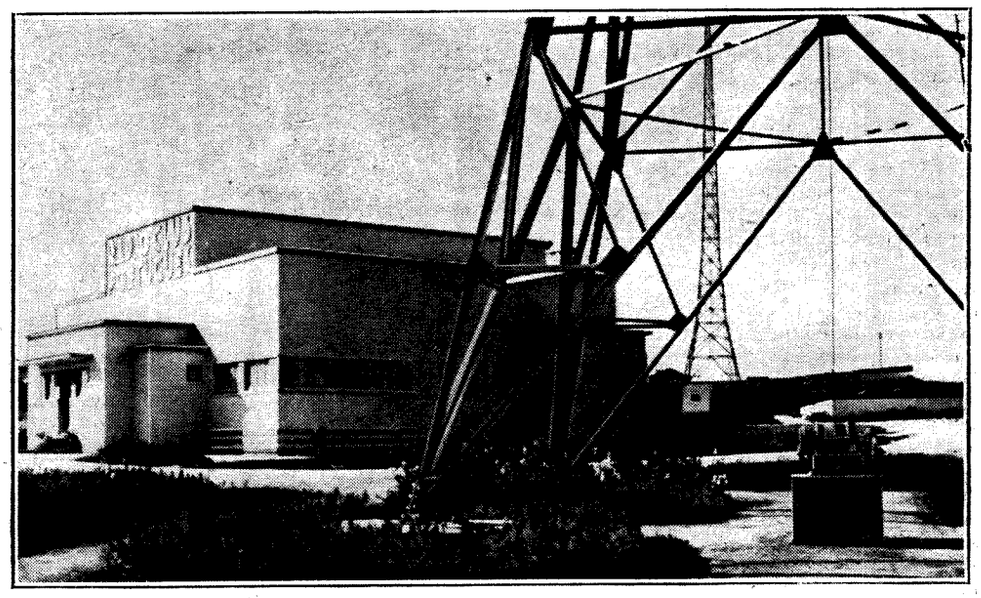

The new transmitter at Parede, in Portugal, which is owned by the Radioclub Portuges, an amateur organisation which broadcasts on 291, 48.4 and 24.2 metres.

On the Short Waves—
good at this time, just before signing off on 14.88 Mc/s.

Later in the evening a good relay of the London Symphony Orchestra (London National Programme) was intercepted from W2XAD, after a piano interlude for a few minutes prior to going over to London at 9.35 p.m.

The half-wave of PPH on 24 Mc/s was again a good signal at 8.30 p.m. on Tuesday, June 30th, and one fairly strong television signal was heard near 40 Mc/s, no attempt was, however, made to estimate the main scanning frequencies, so the origin was untraced.

Excellent results were obtained from W3XAL on 17.78 Mc/s the same evening from 9.30 p.m. to close down at 10 p.m., the signal even over-riding strong intermittent local noise, both the T.A.T. transmitters WKF on 19.22 Mc/s and WLA on 18.34 Mc/s were also enormous signals—with W2XAD erratic and poorer than usual.

E. S. Darlington, during his Tuesday evening "Mail-Bag" programme at 11.30 p.m. on June 30th from W2XAD/F, announced that this occasion concluded the special W2XAD broadcasts—normal schedule to be resumed the following day, i.e., 3-7 p.m. B.S.T.

It was also announced that from this date and during July W2XAF would be using a new aerial, and that reports would be welcome. I tuned up to W2XAF, but found it to be inaudible, though I understand it was received in another locality, yet W2XAD was practically a local-station signal.

ETHACOMBER.

RANDOM RADIATIONS

By "DIALLIST"

No Minister for Broadcasting

SO the Government has, after all, turned down the Ullswater Committee's recommendation that a senior Cabinet Minister should be responsible for the cultural side of broadcasting. There will, I am sure, be few who don't agree that they have done the right thing. The appointment of such a minister would have been a menace to the future of broadcasting, for, as was pointed out by *The Wireless World*, he could hardly have helped, human nature being what it is, taking a greater and greater part in the control of the B.B.C.

The Ullswater recommendation was no doubt inspired by the fact that when M.P.s wanted some time ago to ask questions in the House about certain broadcast items the Speaker ruled that there was no minister to whom they could be put. Presumably, in the future any such questions may be addressed to the Postmaster-General. That is much the best way out of the business, for it would, anyhow, have been ridiculous to have two separate ministers with fingers in the B.B.C. pie.

The Interference Drive

IT is good to see that Major Tryon's memorandum speaks of "early completion of the technical investigation of interference with broadcast reception and the taking, if necessary, of further powers to suppress it." Those last ten words are of vast importance to listeners, for they appear to indicate that the Post Office is inclined to obtain what it has hitherto lacked—legislation empowering it to prosecute those who knowingly cause interference with reception of broadcast programmes. The G.P.O. is at present conducting an intensive anti-interference drive, and it is no doubt adding to its already extensive collection of evidence that legislation of this kind is urgently needed. It will have to come, for there are some people so selfish or so pig-headed that no amount of reasoning or persuasion will induce them to abate the nuisance that they are causing. I have already given instances in these notes, and I could give plenty more.

Starving Television?

The thing that I like least about the memorandum is its apparent intention that the B.B.C. shall meet television costs out of its general income, which will not be increased by more than £150,000 this year, though next year it will go up by about £350,000. The idea appears to be that for a considerable time high-definition television services must be of a more or less experimental nature and that no very great amount of money should be spent upon them. This seems to me all wrong. Television should be allowed to develop very much as sound broadcasting did. If you cast your mind back to 1922 you will agree that we had a great deal to learn about the transmission and the reception of sound when 2LO and the other stations which rapidly followed it were opened. Had we then hung back waiting for developments it might have been six or seven years before we had anything like a broadcasting service. Television is no more in its experimental stages now than sound broadcasting was then. In 1922 you could transmit and receive speech and music in such a way that they were intelligible, even though there was very little "top" and no bass and it was not too easy to tell whether a solo in progress was being played on a harp or a piano. To-day you can transmit and receive images over moderate distances with sufficient clarity for them to have entertainment value. Of course, there will be improvements in television just as there were in sound broadcasting. As they come along transmitters and receivers will be brought up to date or replaced. We have already had far too much havering and hesitation about television. We ought now to go full steam ahead—but we can do so only if the B.B.C. is given adequate funds for both technical and programme development.

A Queer Form of Interference

AN account was published recently of what was perhaps the queerest kind of interference with wireless reception that ever took place. It was found that some of the Transatlantic short-wave services were suffering badly from a curious unwanted noise, and after long investigation the trouble was tracked down to a hospital in which a patient, lying inside a coil of wire, was receiving some form of high-frequency treatment. Radiations from the apparatus were picked up by an adjacent high-power line and re-radiated, with dire effects.

The electrical apparatus used in hospitals can have pretty devastating effects upon reception, as I know by experience. Some years ago, when I was recovering from an operation, I had one of the old Fultograph still-picture receivers by my bedside. I knew that there was nothing wrong with it, but whenever I tried to receive a picture I could get nothing but the most extraordinary patterns of wavy lines. Once I was up and about again it didn't take long to discover that diathermy apparatus working in a distant block of the hospital was responsible. At another time I suffered intermittent interference of a particularly horrid kind, which proved eventually to be due to an amateur X-ray plant using a funny old rotary convertor. I wonder what sort of a time listeners have who live near some of the big London or provincial hospitals provided with all sorts of apparatus for a variety of electrical treatments!

The O.B. Department

ONE of the B.B.C.'s busiest departments just now is the O.B., which, as its initials suggest, is concerned with outside broadcasts. It is kept pretty constantly on the go in summer time by the long succession of sporting events and spectacles, such as the Tattoo, the Trooping of the Colour, and the Royal Air Force Pageant. And very well do its staff perform the multitude of tasks allotted to them. Whether they have to "wire up" York Minster or Canterbury Cathedral, or to maintain contact with a diver on the bed of the Thames or to run lines to different parts of a race course, the O.B. people always come up to

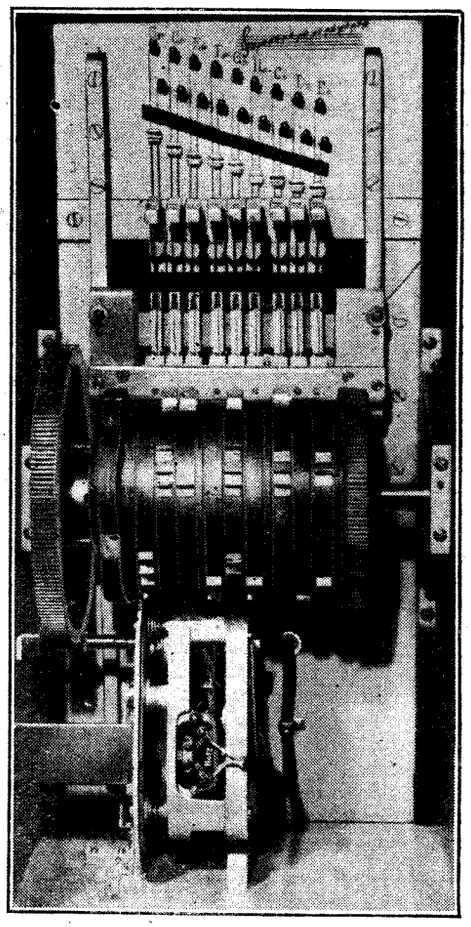

Mechanism of a new electric interval signal used by the 32 kW Czechoslovakian broadcasting station at Brno. The signal consists of piano notes based on a national air.

Random Radiations—

the scratch, and long experience has taught them now just how any particular job should be tackled. They'll have a still bigger task in front of them when it comes to television O.B.s, but I am sure they'll rise to each and every occasion as it comes along.

Queer Howlers

ONE doesn't envy the announcer who is called upon at short notice to read the manuscript of a "talk" because the speaker himself is prevented for one reason or another from attending. In some cases the announcer has probably insufficient time for more than just a glance over the pages in order to get the general drift of the thing and has little inkling of the verbal rocks that may lie ahead. I just missed the beginning of Mr. Geoffrey Boumphrey's third talk in the "Down the River" series describing the progress of himself and George from Bridgnorth to Worcester. Mr. Boumphrey couldn't be there to give it himself, and I hear that the announcer who read it described it as an account of a new trip down the Thames! What I did hear, though, was a rather puzzling reference to a journey made in something called a jig. For a moment I didn't tumble to it; then I realised that he was talking about one of those large-wheeled light traps that horses used to draw on our roads, though the initial "g" is hard as in gimlet, and not soft as in gee-gee. I suppose that in these motorised days words such as gig might be completely strange to announcers and to many others of the younger generation.

Wireless Set Insurance

I HAVE often wondered why some enterprising concern does not start a scheme for what might be called the insured maintenance of wireless sets. The kind of thing I have in mind is this. On purchasing your receiver you would be offered by the dealer the option of insuring with him for one year's complete maintenance in return for a fixed additional payment. Maintenance would cover every charge for adjustments, repairs and renewals. I don't see why such a scheme should not be workable, in the case of mains sets at any rate, for full maintenance on the lines suggested is already undertaken by those firms which specialise in the hiring of sets. For battery sets it might be rather more difficult. The dealer could make a contract readily enough for a year's accumulator charging; but the dry high-tension battery is not quite so easy. If, though, he measured the average H.T. current consumption of the set and took, say, four hours' use a day as a mean, he could probably arrive at a working figure. I am sure that such a scheme would catch on readily with listeners, particularly those of the entirely non-technical order.

The Marconi Stabilovolt

Gaseous Stabiliser and Voltage Divider

THERE are many cases in which an extremely stable source of power is required for the satisfactory operation of apparatus. The most obvious are in laboratory gear, for fluctuations in the HT supply may seriously affect the calibration of oscillators, valve voltmeters, etc.; even in the case of highly sensitive receivers, however, a varying HT supply may have a harmful effect upon the performance. When using apparatus with which constancy of power supply is important it has been customary in the past to employ accumulators. These are, however, expensive and troublesome, for they require frequent recharging, and, moreover, they do not achieve perfection as regards the most important factor—constancy of output.

The use of the Marconi Stabilovolt, however, permits a very constant supply of voltage to be obtained even from the ordinary supply mains. This new development consists of a glow lamp which is connected across the source of supply and which absorbs fluctuations in voltage to a remarkable degree. Various types of Stabilovolt are now available, covering a wide range of applications, but the type STV 280/80 is one which will perhaps find the widest application in connection with receiving equipment and laboratory apparatus.

It is a glow gap voltage divider having five electrodes, and under normal operating conditions a potential of 280 volts is maintained across it, while 70 volts appear between any two adjacent electrodes. It can thus be regarded as a voltage divider tapped at every 70 volts. The current consumed by the tube and its load together is 80 mA., and the maximum output current to the load is about 65 mA.—the difference of 15 mA. representing the current taken by the tube itself. The total current consumption, unlike that of the ordinary resistance voltage divider, is practically constant at 80 mA.; if the load, for instance, takes only 20 mA. instead of the maximum of 65 mA., the tube current increases from the minimum of 15 mA. to 80 − 20 = 60 mA. Not only does the tube compensate for changes in the load current and maintain constant output voltage, but it also absorbs variations in the supply voltage.

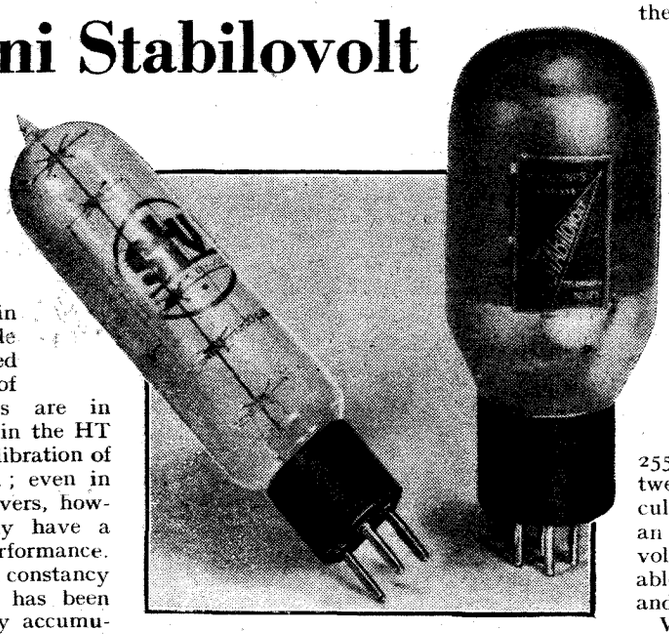

The type H85-255/80 barretter is shown on the left and the STV 280/80 Stabilovolt tube on the right.

The degree of perfection achieved is very high, and the following figures are taken from the detailed description which appears in *The Marconi Review*. Among the examples quoted may be mentioned that a variation of 25 mA. in the current drawn from one electrode causes a change of voltage of only 1.4 per cent., while the same variation in current affects the output from one of the other electrodes by no more than 0.03 per cent. A change of ± 10 per cent. in the input voltage becomes ± 0.52 per cent. in the output. These figures are for the STV 280/40A tube, which is similar to the STV 280/80, but has an output current rating of 30 mA. instead of 65 mA.

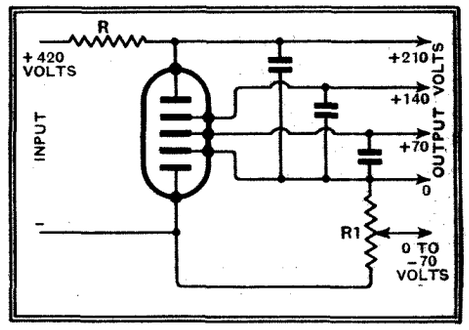

Fig. 1. The connections for the Stabilovolt in an HT supply unit. The resistance R can with advantage be replaced by a barretter.

Connections for a unit suitable for supplying a receiver are shown in Fig. 1, and the input can be derived from mains equipment of normal design. The resistance R is essential and its value depends upon the output of the rectifier. This must not be less than 420 volts, and when it has this value R can be 1,750 ohms. Better voltage regulation is secured, however, by using a barretter in place of this resistance, since it tends to prevent changes of current caused by variations in the supply voltage. A suitable barretter for this particular tube is the H85-255/80, which has a regulation range between 85 and 255 volts at 80 mA. The particular circuit arrangement of Fig. 1 permits an HT supply of +70, +140, and +210 volts to be obtained, with a supply adjustable by the potentiometer R1 between zero and −70 volts for grid bias purposes.

When extreme regulation is required, it may be obtained by the use of two tubes, the output of the first being applied to the second for further stabilisation. The applications of the device are very wide and will be obvious to all who for one purpose or another have felt the need for a stable voltage supply. In all eight different types of Stabilovolt are listed and twelve barretters. The smallest is the STV 75-15 having an output of 8 mA. at 70 volts; this is priced at 36s. The largest is the STV 850-160-11 with an output of 135 mA. at 870 volts and having six gaps; this costs £62. The STV 280/80 referred to here is listed at £5 8s. 6d., and the H85-255/80 barretter at 15s. 3d. The tube is fitted with a standard 5-pin base, and the makers are Marconi's Wireless Telegraph Co., Ltd., of Electra House, Victoria Embankment, London, W.C.2.

New Apparatus Reviewed

Recent Products of the Manufacturers

TRANSRECEIVERS U.S.-WAVE COMPONENTS

IN the development of their small portable sets Transreceivers, Ltd., 444, Ewell Road, Surbiton, Surrey, have found it necessary to evolve several midget components, and it has now been decided to make some of these available to amateur experimenters.

One is an ultra-short-wave HF choke wound on what appears to be a bakelite rod, ¼in. in diameter and 1¾in. long. The rod is machine threaded to give evenly spaced turns and the winding is bakelised in position.

Stout wire-ends are fitted, and it costs 1s. 2d. Its useful range is from about three to five metres, though actually it is quite satisfactory for use over and above the amateur 56-Mc/s band, as we have verified by test.

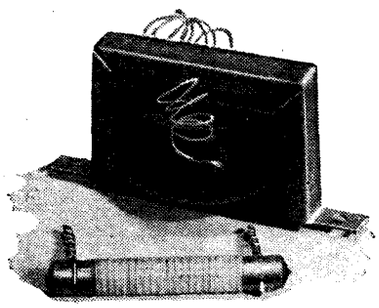

Ultra-short-wave HF choke and miniature modulation choke, made by Transreceivers, Ltd.

The other component consists of a miniature modulation choke for low-power transmitters. Its small size can be well appreciated by comparison with the HF choke shown in the illustration.

We find its inductance to be about 1.5 henrys and its DC resistance 330 ohms. No appreciable change in its inductance takes place when the choke is passing up to 75 mA. of DC. This is a useful component where space is strictly limited, and its price is 6s. 6d.

KABI HUM BALANCER

THE Kabi midget potentiometer, which is described as a hum balancer, as its intended function is for joining across the filament windings on mains transformers for obtaining the true electrical centre to balance out hum, is now available in many more values than hitherto.

The standard sizes were 30, 50 and 100 ohms, whereas the extended range now includes resistances of 250, 500, 1,000 and 1,500 ohms.

Apart from its use as a hum balancer, this Kabi component has been found very useful as a pre-set cathode bias resistor in cases where the resistance has had to be adjusted to suit individual valves. As the component has a rating of one watt it may safely be used for this purpose, for the 1,500-ohm size will carry up to 32 mA. without exceeding its maximum safe load, and the resistance is continuously variable. Its diminutive size, for it measures only ¾in. in diameter, is an added advantage, since it takes up very little space, and as the fixing bush is electrically connected to the moving contact, fixing it on a metal chassis makes one of the connections and only one other wire is then required to complete the cathode circuit.

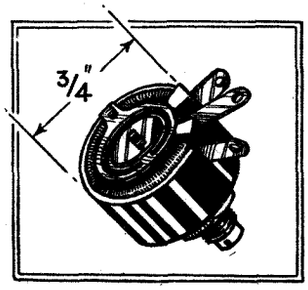

Kabi Hum Balancer: It has a rating of 1 watt and can be used as a pre-set cathode bias resistor.

Specimens of the new models have been tested and their resistances all agree very closely with the marked values, only one showing a discrepancy greater than five per cent., the average of the remainder being just under three per cent.

In values up to 1,000 ohms they cost 2s. each, while over this the price is 2s. 6d. Supplies are obtainable from F. W. Lechner & Co., Ltd., 61, Spencer Street, Clerkenwell, London, E.C.1.

CLIX NEW VALVE-HOLDERS

THE existing type of chassis valve-holder with Frequentite plates made by Lectro Linx, Ltd., 79a, Rochester Row, London, S.W.1, is being replaced by a new design in which the sockets are allowed a certain amount of side-play.

It appears that one reason for this change is that in the manufacture of the ceramic plates, varying degrees of shrinkage takes place during the firing process, with the result that there is often considerable discrepancy in the relative positions of the socket holes.

By making the socket holes larger than the limits of variation met with in manufacture and adopting a floating type of resilient socket this difficulty is overcome and a sound electrical connection can be ensured with all pins on the valve; furthermore, excessive pressure is not required to insert the valve.

Another interesting feature of the new pattern is the fitting of metal inserts in the fixing holes. This has been done to minimise the likelihood of fracture of the ceramic plates, since the material is rather brittle, when the valve-holder is riveted to the chassis. The striking shock of the riveting tool is taken by the metal insert and not by the plate, as formerly.

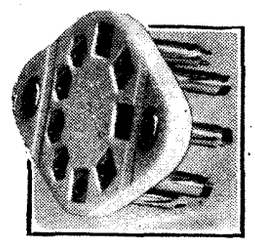

New Clix Floating Ceramic Valve-holder.

These new Clix Floating Ceramic Valve-holders are made in 4-, 5-, 7- and 9-pin types which, with terminals, cost 10d., 11d., 1s. 2d., and 1s. 4d. each, and 8d., 9d., 11d., and 1s. each, respectively, without terminals.

COLLARO U36 UNIVERSAL RADIOGRAM UNIT

A NEW electric gramophone motor for use on either AC or DC supplies has been introduced by Collaro, Ltd., Culmore Works, Culmore Road, Peckham, London, S.E.15. It is an exceptionally neat and well-designed unit and has a totally enclosed motor, yet the commutator and brush gear are quite accessible for examination whenever the need arises.

A new governor system is embodied that maintains a constant turntable speed at all reasonable and normal loads, but the customary speed control is, of course, included.

The U36 model can be obtained with or without a pick-up, and both types embody an automatic stop of new pattern.

In the case of the radiogram unit, which is fitted with a Collaro No. 20 pick-up, the adjustment of this stop is made at the works and no further attention need be given to it.

A test was made with one of these units exactly as received, and it functioned perfectly on connecting to the supply mains. The stop was correctly set and enabled a full-size record to be played, the stop coming into action at the right moment.

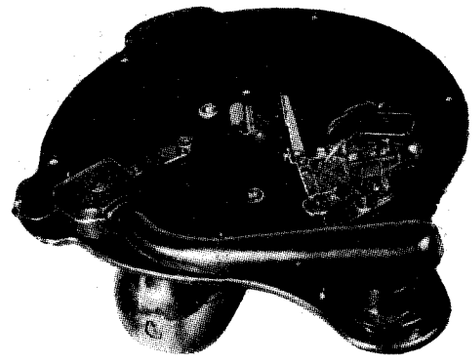

The Collaro Model U36 Universal Radiogram unit complete with pick-up and automatic stop.

These units can be used on 100 to 130 or 200 to 250 volts AC or DC, and external resistances are not required, for a terminal plate is fitted on the side of the motor and the terminals clearly marked for the various types and voltages of electric supplies.

The motor is silent and entirely free from vibration, and with the casing earthed causes no electrical interference whatsoever. This is no doubt due to the inclusion of an interference suppressor in the form of condensers, which is also suitable for tropical use.

The pick-up fitted has a good frequency characteristic extending well into the upper register, yet it gives ample bass to ensure a satisfactory balance. On a 210-volt DC supply the motor required 68 mA to drive it under load, the power taken thus being 14.3 watts only.

Fitted with a 12-in. turntable, the prices are £3 5s. without pick-up and £4 5s. as a radiogram unit, the latter including a No. 20 pick-up.

Recent Inventions

The following abstracts are prepared, with the permission of the Controller of H.M. Stationery Office, from Specifications obtainable at the Patent Office, 25 Southampton Buildings, London, W.C.2, price 1/- each

Brief descriptions of the more interesting radio devices and improvements issued as patents will be included in this section

TUNING INDICATORS.

THE names of the stations are printed on a panel in diagonal lines, and in descending order of wavelength, as shown at A. At the sides of the panel are a pair of screw-shafts S, S1, on which are mounted two collars C carrying an endless band of semi-transparent material provided with a frame or window W.

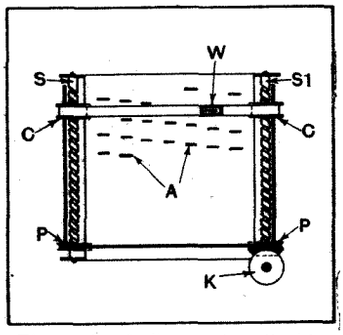

The tuning indicator described in patent No. 444329.

The collars C are screw-threaded, or carry an internal pin which engages with the thread on the shafts S, S1, so that as the tuning knob K is rotated the window W moves both horizontally and vertically across the panel, exposing one after another of the diagonal line of station names. The drive from the tuning knob is communicated to the distant shaft S through a pair of pulleys P. The panel may be opaque; or if it is translucent, it is illuminated from the rear.

L. H. Brown. Application date October 18th, 1934. No. 444329.

o o o o

"MORE-SILENT" TUNING

THE use of AVC automatically increases the sensitivity of a receiver at inter-station points on the tuning dial. The resulting background of noise is usually subdued by the use of a muting or suppressor circuit which, in effect, throws the loud speaker out of action until such time as a worth-while signal is tuned in. However, even with this safeguard, if the tuning knob is rotated over a considerable part of the wave-band the set becomes "alive," and the loud speaker responds, momentarily, to quite a number of "strong" signals if these lie between the station to which one has just been listening and another desired station, say, at the other end of the wave-band. In other words, when changing-over between two such stations, the tuning may still be unpleasantly "noisy" in spite of the use of normal muting.

According to the invention a further time-lag is imposed on the muting circuit, so that no intermediate stations are heard, when changing from one programme to another, until the new station has been tuned in for a period of about half a second. After this interval the circuits are automatically restored to normal.

F. T. Lett. Application date July 17th, 1934. No. 444391.

CATHODE RAY TUBES

THE deflecting plates are shaped so that they lie parallel to the axis of the tube at the ends nearer the cathode, but diverge outwardly at the ends nearer the screen. In addition, their inner surfaces are coated with an electron-emitting substance, such as barium oxide or cæsium.

Since the plates are at a positive potential, relative to the cathode, the impact of some of the electrons from the normal stream will give rise to secondary emission. This serves to augment the stream, and produces a finely focused scanning-spot of increased light-intensity.

F. J. G. van den Bosch. Application date February 13th, 1935. No. 444775.

o o o o

CRYSTAL OSCILLATORS

A PIEZO-ELECTRIC crystal is mounted between upper and lower electrodes so as to maintain a fixed air-gap. It is held in position by a number of adjustable metallic fingers, which permit the crystal to be moved bodily, in order to secure an initial adjustment of the working frequency, before it is finally clamped in position. This form of holder also facilitates the rapid replacement of one crystal by another.

R. E. Franklin (assignor to Radio Corporation of America). No. 2027526. (U.S.A.)

PIEZO-ELECTRIC CRYSTALS

WHEN a piezo-electric crystal, such as quartz or tourmaline, is used either as an oscillation-generator, or as a filter circuit designed to pass or reject a particular frequency, it is highly desirable that the crystal should be cut so as to have no "parasitic" oscillations. This result is secured by cutting the crystal so that its length along the X-axis is equal to its length along the Y-axis, whilst its thickness or length along the Z-axis is slightly less than either of the first two dimensions.

R. Lucas (Assignor to Cie Générale de Télégraphie Sans Fil). No. 2029729. (U.S.A.)

o o o o

RECEIVING PICTURE AND SOUND SIGNALS

INSTEAD of transmitting television-with-sound signals on closely adjacent carriers, and receiving them both on a single flatly tuned input circuit, the two signals are radiated on carriers separated by, say, 10 megacycles, and are received separately but are heterodyned with a common local oscillation.

As shown in the Figure, the picture signals sent out, say, on a carrier-wave of 45 Mc/s are transferred to a mixing-valve V, which is coupled at L to a local-oscillator valve V2 generating, say, 60 Mc/s. It is important that this frequency should be higher than either of the signal frequencies, in order to reduce the possibility of interference with high-powered transmitters. The resulting beat frequency of 15 Mc/s is developed in the anode circuit LC, and passed on through an appropriate circuit to subsequent amplifiers.

Sound signals on a carrier of 35 Mc/s are similarly picked up by the valve V1, which is coupled to the local oscillator V2 at L1. The resulting IF frequency of 25 Mc/s is produced in the anode circuit LC1 and passed on to its own chain of amplifiers. The local oscillator and input circuits are ganged together, so that the two beat frequencies are kept constant.

L. R. Merdler and Baird Television, Ltd. Application date February 8th, 1935. No. 444774.

o o o o

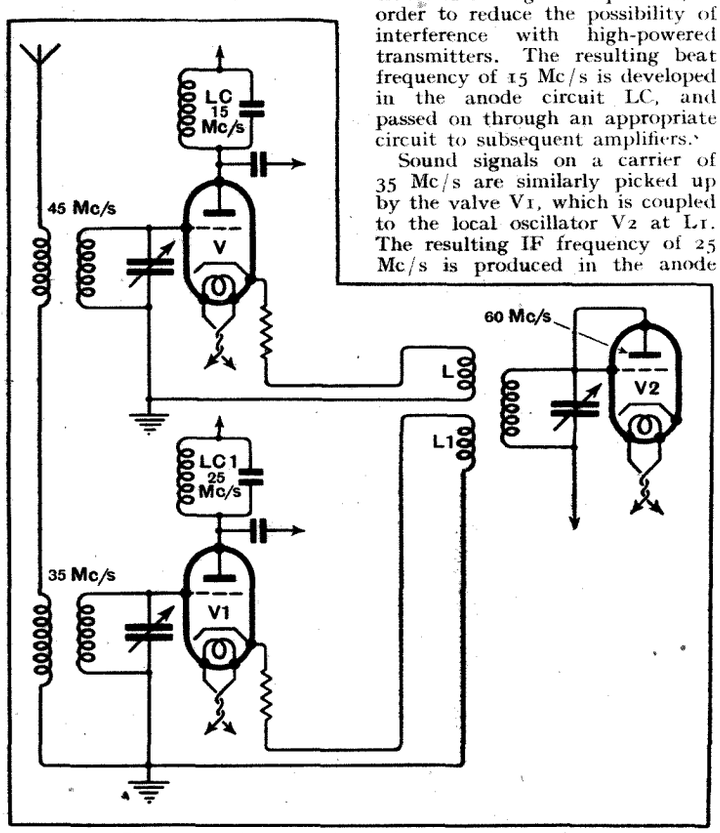

Frequency changer, circuit for television receiver.

TUNING-COILS

A COIL is wound in one layer A along the former, and is then doubled back to form a second layer B in which the direction of winding is opposite to the first. The coil is tuned by a moving iron core C, the whole of the tuning capacity being distributed between the windings, so that a standing wave is set up along the length of the coil. Selective tuning is effected by inserting additional coupling-coils or plates at nodal points. Or

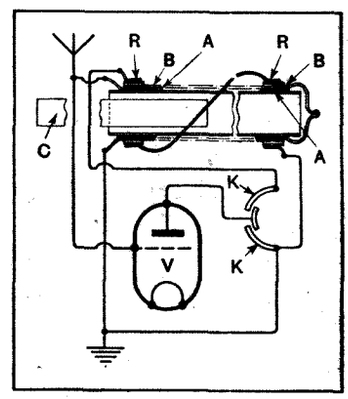

Details of the tuning circuit embodying a variable iron core.

the extra coils or plates may be used to suppress an undesired signal.

As shown, reaction is applied to the valve V through the superposed coils R, which are connected in series across the fixed plates K of a variable condenser in the output circuit. The arrangement is stated to give constant back-coupling over the whole of the tuning range.

Application dates June 27th and November 20th, 1934. S. G. Brown. No. 444951.

o o o o

RECEIVING TELEVISION AND SOUND

BOTH types of signal are heterodyned by the same local oscillator, which is set to a frequency between that of the picture carrier and the sound carrier. In practice the two signals are usually transmitted on carriers sufficiently separated to ensure that the resulting beat frequency is higher than the maximum signal frequency.

The local oscillator is a screen grid valve with back-coupling through the residual inter-electrode capacities. Its anode is coupled to the aerial, and the grid is biased to the bottom bend of the curve. The resulting beat frequencies are fed through filter circuits to their respective amplifiers.

Radio Akt D. S. Loewe. Convention date (Germany) July 1st, 1933. No. 444881.

The Wireless World
THE PRACTICAL RADIO JOURNAL
26th Year of Publication

No. 881. FRIDAY, JULY 17TH, 1936. VOL. XXXIX. No. 3.

Proprietors: ILIFFE & SONS LTD.

Editor:
HUGH S. POCOCK.

Editorial,
Advertising and Publishing Offices:
DORSET HOUSE, STAMFORD STREET,
LONDON, S.E.1.

Telephone: Waterloo 3333 (50 lines).
Telegrams: "Ethaworld, Sedist, London."

COVENTRY: Hertford Street.
Telegrams: "Autocar, Coventry." Telephone: 5210 Coventry.

BIRMINGHAM:
Guildhall Buildings, Navigation Street, 2.
Telegrams: "Autopress, Birmingham." Telephone: 2971 Midland (4 lines).

MANCHESTER: 260, Deansgate, 3.
Telegrams: "Iliffe, Manchester." Telephone: Blackfriars 4412 (4 lines).

GLASGOW: 26B, Renfield Street, C.2.
Telegrams: "Iliffe, Glasgow." Telephone: Central 4857.

PUBLISHED WEEKLY. ENTERED AS SECOND CLASS MATTER AT NEW YORK, N.Y.

Subscription Rates:
Home, £1 1s. 8d.; Canada, £1 1s. 8d.; other countries, £1 3s. 10d. per annum.

As many of the circuits and apparatus described in these pages are covered by patents, readers are advised, before making use of them, to satisfy themselves that they would not be infringing patents.

CONTENTS

	Page
Editorial Comment	49
5-Metre Radio-telephone	50
M.P.s as Listeners and Broadcasters	53
Unbiased	54
The Home Laboratory—I	55
Broadcast Brevities	57
Control	58
Is It Up to Standard?	60
Current Topics	63
Listeners' Guide for the Week	64
Home Recording	66
Random Radiations	66
High-pass and Low-pass Filters—V	68
Protecting Cathode-Ray Tubes	71
Recent Inventions	72

EDITORIAL COMMENT

The B.B.C. Announcer

Should He Remain Anonymous?

STATEMENTS have recently been made to the effect that the B.B.C. is considering whether names of programme announcers should in future be made public.

We would suggest that the B.B.C. is not yet old enough to need to learn a lesson twice. Those who care to cast their memories back a few years will recollect that there was a time when the announcers' names and pictures were constantly before the public, and we do not think it would be an exaggeration to say that quite a number of listeners turned on their sets to hear a favourite announcer rather than to hear the programme items which he announced.

The question resolves itself into whether we want to return to a regime under which the announcers became radio stars themselves or prefer announcing to be done by persons who regard themselves as public servants whose business it is to mask their own individuality and make the most of the programme material which they have to announce.

Stars—with Stars' Salaries

Of one thing we are quite sure, and that is if once the identity of announcers were disclosed the B.B.C. would have to pay them higher salaries to retain their services, because—such is the way of the world—they would soon find that the publicity they were receiving would raise them on pinnacles in the public estimation, and they would be able to command salaries far in excess of what would be due to them for their present anonymous task.

Without being concerned in the question of remuneration, we hope that the B.B.C. will be very slow to adopt the suggestion of giving names to announcers, and we are convinced that such a practice would in no way contribute to the dignity of the profession of announcing.

Interference

AFTER many delays it seems that we may at last look forward to the time when the production of preventable electrical interference with wireless reception will be banned by law. At any rate, the Postmaster-General, in his recent statement in the House of Commons, has made it fairly clear that it is the Government's intention to promote legislation to that end.

In coming to this decision, he acknowledges having been influenced by the Ullswater Committee's recommendation and also by the Report of the I.E.E. Committee, which, by a singular coincidence (considering the years that have elapsed since its formation), came into his hands a few days after the White Paper containing the Government proposals was published.

Readers who can cast their minds far enough back will remember that it was the original suggestion of *The Wireless World* that legislation was necessary, but that before an Act was framed it was desirable that the electrical, wireless and other interests concerned should come to some kind of agreement; preferably under the auspices of the I.E.E. Our suggestions were adopted.

Since that time (November, 1932) things have moved slowly, and the wording of the P.M.G.'s statement hardly gives promise of any very rapid acceleration. However, at the time of writing, the I.E.E. Committee's Report has not been made public; we propose to review its findings next week.

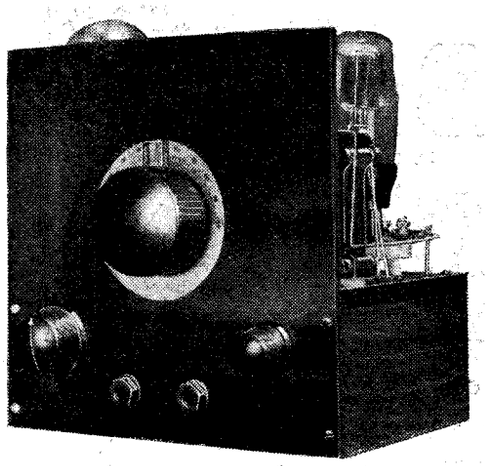

5-Metre Radio-

A Compact Battery-fed Transmitter-Receiver

By D. R. PARSONS, Grad. I.E.E., A.M.I.R.E.

(Stratton and Co. Ltd.)

A PORTABLE radio telephone set, which usually employs a pair of valves, the operating conditions of which are varied to suit transmission or reception, is often termed a "transreceiver." Such a unit is useful for field-day tests, when the secretary of a radio club can give his instructions to different members, placing them in elevated positions. This also enables 5-metre listeners to adjust their receivers locally before listening to scheduled tests from a distant transmitter. The uses to which such sets may be put are unlimited. Civil engineers use them abroad for communication between pylons when erecting bridges across harbours and between islands, while mechanical and electrical engineers are equally alive to their many applications in industry.

The radiophone to be described is for headphone reception only, and as far as the transmitter side is concerned, it should be borne in mind that under existing regulations this can only be used after the necessary morse test has been passed and the official licence and call-sign obtained from the G.P.O. authorities.

This instrument was designed with the object of checking the Sunday morning transmissions from the 58 Mc/s station G-6SL at Birmingham, and has proved extremely efficient in use. It was originally intended to build an even more compact unit, using midget valves and batteries, which would be slightly larger than the average box camera. With an experimental layout it was found that the receiver portion functioned exceedingly well, but directly the impedance of the oscillator valve was lowered to increase the transmitting output, the anode current consumption naturally increased until the total drain on the midget batteries was excessive. Unhappily, no valve is available which will give enough HF output for the available DC input and so the idea of building a midget set was abandoned. Standard B.V.A. valves were next tried in three or four different circuits and the final arrangement employed Mazda P220 and Pen.220 valves.

It may be mentioned that the main difficulty in design is to find a suitable type of valve for the first position, i.e., the oscillator-detector valve. For example, two Mullard PM2DX valves were tried, and on reception the results were excellent, the regeneration control being extremely smooth and delightful to operate. R9 signals were received at nearly 20 miles distance, but the transmitter had a range of possibly 200 yards! On using a lower impedance valve as detector, regeneration became fiercer and fiercer, and the solution lay in finding a low impedance valve with good regeneration properties.

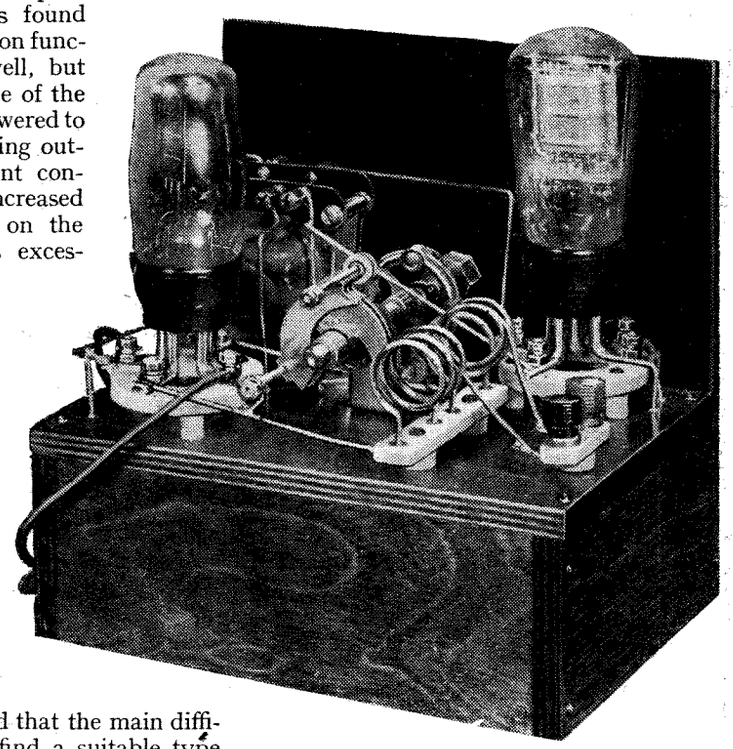

Rear view, showing clearly the mounting of the split tuning coil and aerial coupling coil.

Experience has shown that the Mazda P220 valve is extremely reliable on 5 metres as an oscillator, and by decreasing the anode voltage to a low value the fierceness of regeneration may be reduced to a considerable extent.

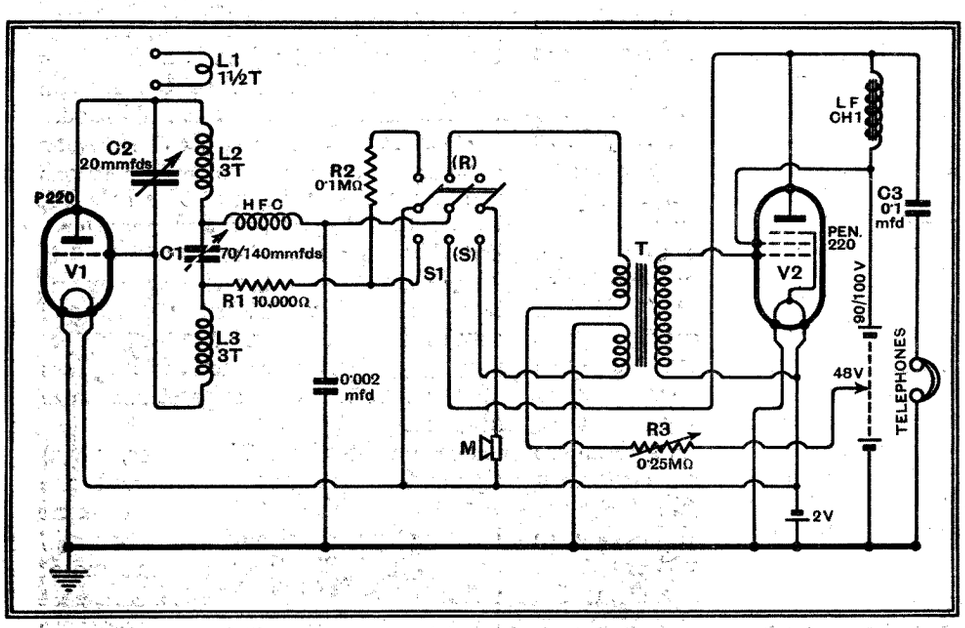

Fig. 1.—The theoretical circuit diagram of the 5-metre radio-telephone giving also the values of the components.

The Oscillator Circuit

Fig. 1 shows the theoretical circuit employed. V1 is the oscillator-detector valve while V2 is the modulator-output valve. It will be seen that a modified form of Hartley circuit is employed as an oscillator; the original circuit was actually due to Franklin. The centre point of the anode coil L2 + L3 is broken and a semi-variable condenser C1 of some 70/140 mmfd. is joined to the inner ends of the coils L1 and L2, which, incidentally, have 3 turns, ¾in.

Telephone

THERE are many occasions when it is impossible to have a wired telephone between two given points, and it is then that radio communication comes into its own. In these circumstances it is generally essential that the apparatus should be compact and portable; carrier frequencies of the order of 60 megacycles have particular advantages in this direction, since even the aerials are small and may be erected in a field or on the running board of a private car.

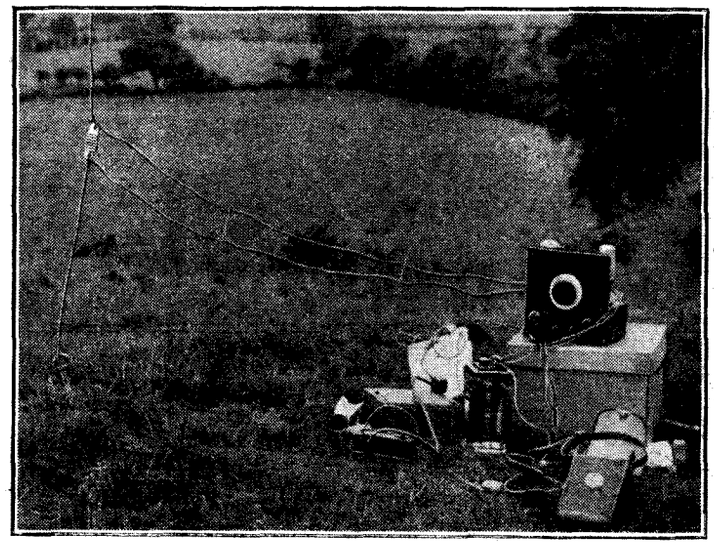

The transmitter-receiver in use as a portable field station.

in diameter. These coils are tuned to resonance by the tuning condenser C2, having a maximum capacity of 20 mmfd. It will be appreciated that the resultant capacity across the coils actually consists of the condenser C2 in series with C1, plus any stray capacities. C1 isolates the anode and grid feed circuits and although its capacity is relatively large when compared with C2, it may be used to adjust the final wave-range of the set.

Assuming for the moment that the 3-pole double-throw switch S1 is on the receive position R, it will be seen that the anode of V1 is fed through the by-passed HF choke to the primary of the special combined microphone and LF transformer T, while the grid leak consists of R1 and R2 in series, giving a total resistance of

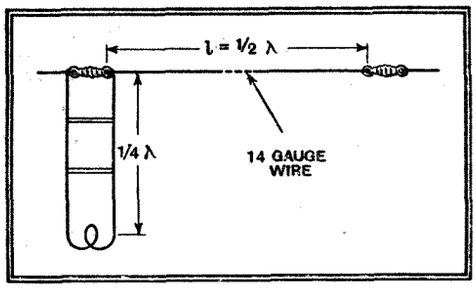

Fig. 2.—Arrangement of the aerial that it is suggested should be used with the radio-telephone. For various frequencies the length *l* will be as follows:

Frequency	Wavelength (λ)	$l = \frac{1}{2}\lambda$	
mc/s	metres	ft.	ins.
56	5.357	8	3¼
57	5.263	8	1½
58	5.172	7	11¾
59	5.085	7	10
60	5.00	7	8½

110,000 ohms. This value of resistance, together with the capacity in circuit, enables the valve V1 to go into a state of super-regeneration as the value of the resistance R3 is decreased. The 0.25-megohm resistance is connected to a potential of approximately 48 volts positive. With such a small voltage on the anode of the detector, the radiation from the receiver is minimised and therefore causes little interference. The LF potentials appearing at the anode of V2 are fed through the condenser C3, due to the large impedance of the LF choke CH1 at speech frequencies. The value of C3 appears small, but since only headphone reception is required, there is little object in reducing its reactance since a larger condenser would take up valuable space in the receiver.

It will be noticed that the grid bias battery has been eliminated by earthing LT+. Since only 2 volts bias is then available, the output valve has to be carefully chosen and although the valve used is slightly under-biased, no harm will result.

Changing over to "Transmit"

On the send position S, the microphone circuit is closed, the LT accumulator coming into action as the source of energising current. A low voltage is desirable here to reduce the background noise of the single-button microphone which is employed. The 100,000-ohms leak is not in circuit when transmitting, only the 10,000-ohms leak being used. The anode of the oscillator is switched over from the primary of T to the anode of V2 and the latter is then used as a modulator, the choke CH1 being the Heising modulation choke.

Little difficulty should be found in building, since the photographs show clearly the method of construction used in the original model. One or two points, however, may be mentioned for the guidance of constructors. It is advisable to fit all the components which are under the baseboard first since the top of the wooden chassis may then be placed on the edge of a table for assembling the parts underneath. In fixing the dial and condenser, the knob dial and cursor should be fitted to the panel first and then the coupler, bracket and condenser correctly fixed at right angles to the panel. This ensures an even movement of the slow-motion head incorporated in the dial. The 3-turn coils should be mounted close to each other as shown to ensure tight coupling, and the 1½-turn aerial coupling coil fixed between them.

The set may now be tried out. The batteries should be connected up and the 70/140 mmfd. condenser should be screwed to nearly maximum capacity. On switching over to the receive position, a rushing noise should be heard as the regeneration knob is turned clockwise. This noise is normal and is greatly reduced when a carrier is received. In the transmit position, the microphone should be plugged in the transmitter and the modu-

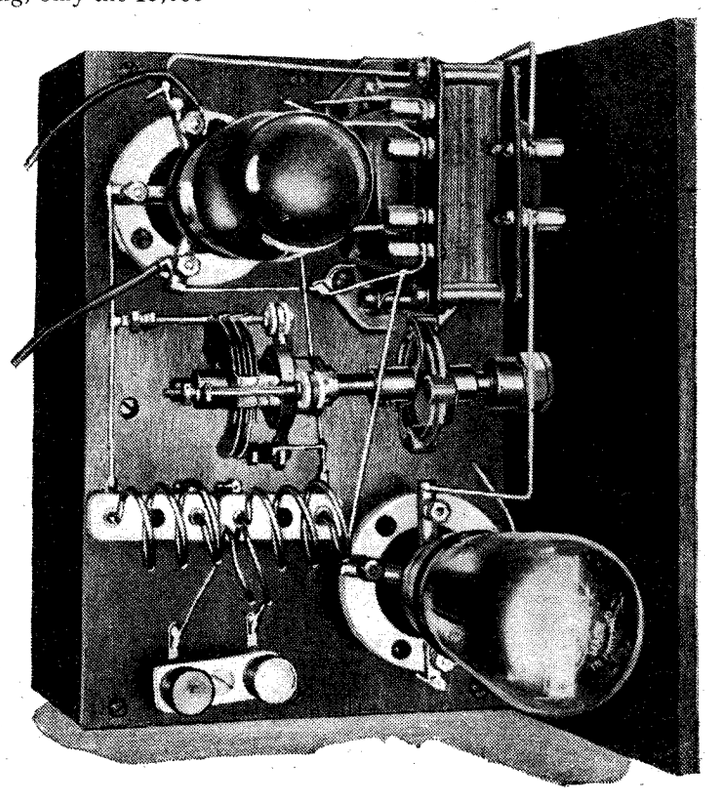

Components mounted above the baseboard.

5-Metre Radio-Telephone—

lation may be checked by speaking into the microphone with the headphones in circuit. If speech is heard, this shows that the modulator is amplifying. The headphone load should next be removed by pulling out the headphone plug. The aerial should now be joined up to its coupling coil.

During tests, a vertical ½-wave Hertz aerial with ¼-wave feeders was used. Fig. 2 shows the dimensions required for different carrier frequencies on the 5-metre band. Since the correct aerial coupling is very critical, it is advisable to have some means of checking the HF output. The ½-wave aerial used had a current antinode at its centre and a 60-mA fuse lamp and holder may be mounted in the exact centre of the aerial to indicate resonance. One inch should be subtracted from the total length of the aerial when the fuse bulb is in circuit. For example, a 58-Mc/s aerial, 8 feet long, should be cut at the centre and half an inch taken off each half of the aerial before soldering the ends to the fuse bulb holder. With the aerial coupling coil tightly coupled to the anode coils, the dial should be turned and it will be found that the 60-mA bulb glows at two settings on the dial. This indicates that the coupling is too tight and the coil should be bent slightly farther away until the bulb only glows at one point on the dial. On speaking into the microphone, the glow of the bulb will noticeably increase. It will be found that the distance at which one has to speak into the microphone is very critical, usually about two inches.

When the optimum coupling is found, the fuse bulb and holder should be removed and the proper aerial of the required dimensions connected. It is useful to have an 0-50 milliammeter in the negative HT lead, since for a given frequency, the total current will show a slight increase when the feeder line is connected. There is little object in using more than 100 volts HT for the anode supply, and the transmitter will fully light a fuse bulb on 90 volts. At this voltage the anode current is 13 mA on "receive" and 22 mA on "send."

The wave-range covered is approximately 4.5-6.5 metres, but it may vary with different sets. Those wishing to check the wave-range can easily do so in the manner described in a previous issue of this journal.[1]

Two-way communication over 5 to 10 miles is possible with this transmitter-receiver, and under favourable conditions 10 to 20 miles may be covered. Before making the unit, it is advisable to fully appreciate the properties of ultra-short-wave transmission and the distances likely to be covered on transmission and reception. The reader wishing to do so is referred to a previous article on this subject by the writer.[2]

In conclusion, the writer wishes to thank the British Amateur Stations G-6XK and G-6DL for their co-operation in initial testing during the development of this set.

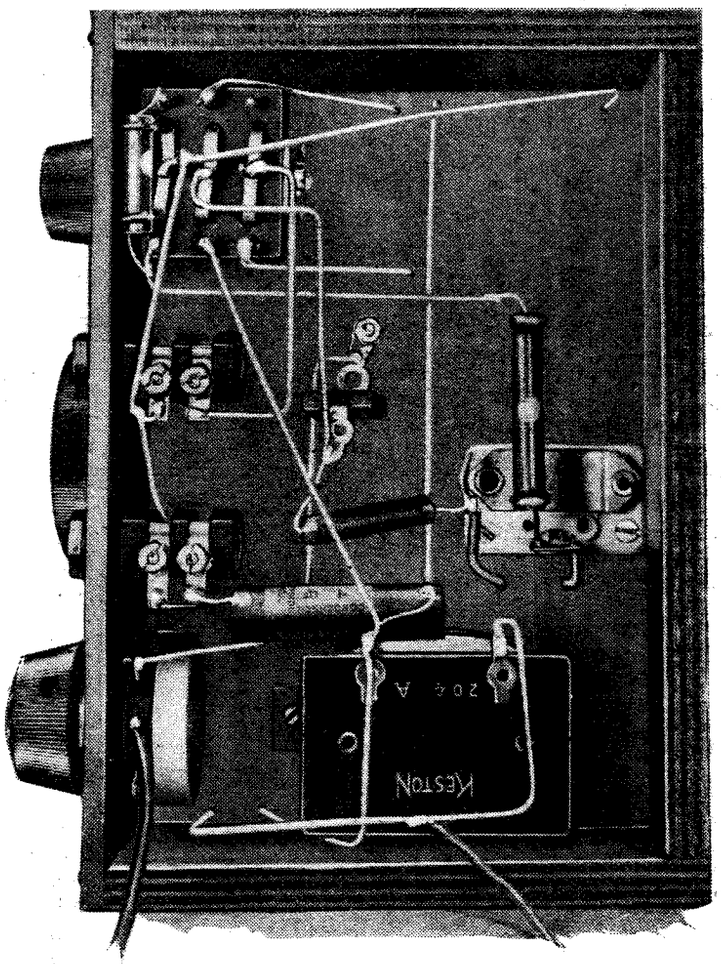

The remaining components are housed in the space under the baseboard.

LIST OF PARTS

1 **Variable condenser** Eddystone "Microdenser" 960/20
1 **Slow motion driving head** (less knob) Eddystone 1012
1 **Knob dial and cursor** Eddystone 1026
1 **Flexible coupler** Eddystone 1009
1 **Semi-variable condenser** 70/140mfds. Cyldon ST140
1 **Resistance** 10,000 ohms 1 watt Erie
1 **Resistance** 100,000 ohms, 1 watt Erie
(Bulgin, Dubilier, Claude Lyons, Polar-NSF)
1 **Potentiometer** 0.25 megohm, without switch Erie
(Ferranti, Polar-NSF, Reliance)
1 **Fixed condenser** 0.002 mfd., mica, Tag type Dubilier
(T.C.C.)
1 **Tubular condenser** 0.1 mfd., 200 v. working Dubilier
(Bulgin, Ferranti, Polar-NSF, T.C.C., T.M.C.)
1 **Valve holder** 4-pin Eddystone 949
1 **Valve holder** 5-pin Eddystone 950
(B.T.S.)
1 **HF Choke** Eddystone 1011
1 **LF Choke** 25 henrys, 40 mA Keston 204 (A)
1 **Special Mic/LF transformer** ratios 60:1 and 3:1 Wearite
2 **Single circuit midget jacks** B.T.S.
2 **Universal plugs** B.T.S.
1 **Double throw switch** 3-way Wearite 123
1 **Terminal saddle** Eddystone 1046
2 **3-turn coils** Eddystone 1020
1 **Microphone, single button type** Electradix
(Peto-Scott, Raymart)
1 **Pair headphones,** 2,000 ohms
1 **HT Battery,** 99 volts, standard type
1 **L.T. accumulator,** 20 volts, 20 amp.-hrs.
1 **Valve** Mazda Pen. 220
1 **Valve** Mazda P220

Book Review

Foundations of Wireless. By A. L. M. Sowerby, M.Sc. Pp. 260, with 157 illustrations and diagrams. Iliffe and Sons Ltd., Dorset House, Stamford Street, London, S.E.1. 4s. 6d. net.

THIS is not another "Wireless Without Tears" book, though one should hasten to add that the information it contains is administered as painlessly as possible; without being unduly flattering, it might be said that wherever possible it is administered very pleasantly indeed.

The book is not addressed to the kind of "lowbrow" who is satisfied with something that will merely take the edge off his appetite for knowledge; still less is it for the academic "highbrow." The type of reader for whom the author has written is clearly the wireless amateur or student who feels the need for rearranging his ill-assorted scraps of knowledge on a sound and sure foundation. Actually, however, no previous knowledge is assumed.

The series of articles under the same title which appeared in *The Wireless World* during 1934-35 is the basis of the present book, but the material has been drastically revised and rearranged for publication in book form and becomes almost a new work.

An outline of broadcasting, explaining the nature of wireless signals and their transmission and reception, forms the introductory chapter, and from this stage the reader is taken on through elementary electrical notions, direct current, alternating current, and high-frequency current theory to the tuned circuit. Having reached this point he is in a fair way to understand the essentials of wireless reception, to which, incidentally, the book is confined; transmission is not touched upon except in the introduction.

Subsequent chapters deal in an extremely logical manner with such essentials of reception as rectification, high-frequency amplification, selectivity and low-frequency amplification, while the latter part of the book deals with the refinements that go to make up the modern receiver.

Treatment throughout is in the sympathetic and lucid style of the original "Foundations" series; the author has exceptional powers of anticipating the difficulties of the average reader, and spares no pains to smooth his path. H. F. S.

[1] M. G. Scroggie, B.Sc., A.M.I.E.E. "Measuring Ultra-Short Wavelengths," Sept. 20th, 1935.

[2] "Range of 5-Metre Transmissions," Dec. 13th, 1935.

M.P.s as Listeners and Broadcasters

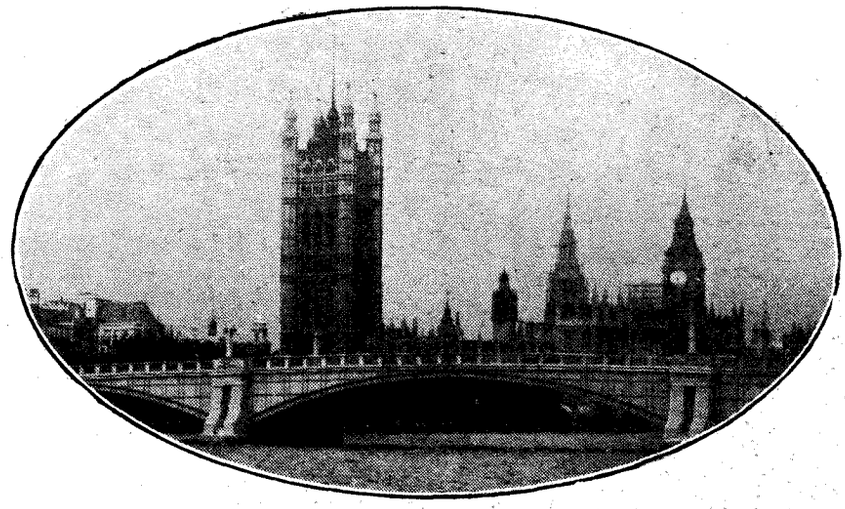

Some Thoughts on the Recent Parliamentary Debates

By L. MARSLAND GANDER

DO M.P.s make good listeners? As a veteran of two campaigns—that is to say, having sat through two debates on broadcasting in the House of Commons—I must say, Ministerially, that the answer is in the negative.

My first powerful reason is that they will not listen to one another. The division figures after the last debate showed that there were nearly 350 members in the House. Yet at no time during the proceedings could I count more than forty or fifty on the floor.

Then the Postmaster-General shocked me by interposing: "Who is Stainless Stephen?" Mr. George Lansbury said naïvely that when he heard Bach he wished that he would bark elsewhere. These were opposite extremes of Philistinism. What convinced me chiefly that M.P.s do not listen was that the recent debate ranged airily for seven hours from the Gold Standard to the Indian Constitution, by way of Egypt and the Sphinx.

It did not touch the fringes of the vast programme problem of the B.B.C., I heard no word on the desirability of several alternative programmes, nobody discussed the entertainment standards of the B.B.C., nobody asked why the B.B.C. goes on "part-time" in the summer. Nobody seriously questioned whether £2,000,000 of public money is spent in the best possible way for the entertainment of Britain's diverse millions.

Major the Rt. Hon. G. C. Tryon, M.P., H.M. Postmaster-General. His controlling hand is certainly strengthened by the rejection of the proposal to appoint a "Minister of Broadcasting."

Still, to do our legislators justice, if they are good M.P.s they cannot also be consistent listeners to the B.B.C. because their place is in the House of Commons. Do they, then, make good broadcasters?

Miss Megan Lloyd George evidently thinks so. She was insistent that there should be more politics on the air. She wanted a microphone in the House of Commons, or, failing that, debates by M.P.s in the studios of Broadcasting House. "The B.B.C. is scared of controversy," she declared.

Listeners have to make up their minds on political issues only a day or two before the elections. There should be continuous political propaganda long before, she said. She reminded M.P.s that she had taken part in the "Week in Westminster" series which had been running successfully for six years. In fact, she said, she had only had two critical letters, both dealing with insignificant aspects, during that time.

Yes, said Mr. Attlee, leader of the Opposition later, but the "Week in Westminster" talks were "served cold." He admitted, incidentally, having given some "less admirable" talks himself, presumably less admirable because they were "served hot."

The Opposition does not like the idea of having a so-called "impartial" observer from the B.B.C. in the House to comment on debates in the news bulletins. It contends that no observer can be impartial in the circumstances. Hence I deduce that the Opposition does not really want any more political broadcasting, probably because it feels that it would get less representation than the other side of the House.

As the Government do not want more politics on the air either, we may safely assume that Miss Megan's voice will, on this topic, continue to cry in the wilderness as well as in the "Week in Westminster," and I am certain that will be "O.K. by the man-in-the-street."

Mr. Lansbury made the breeziest contribution to the discussion of M.P.s as broadcasters. He said that he once broadcast a twenty minutes' talk to the unemployed, and the B.B.C. paid him twelve guineas for it. This was a scandal. I was not at all clear whether Mr. Lansbury meant that he was underpaid or overpaid.

He added that a colleague told him he was a "blackleg" because he (the colleague) received fifteen guineas for a talk of the same duration. However, expanding the theme, he said that Sir John Reith had at command an enormous system of patronage. He demanded, as a safeguard, real control by the House of Commons, and hoped the new Charter would be so framed that this could be given effect.

Talk about relatively unimportant topics like private lives and the future of the relay companies has occupied an altogether disproportionate amount of time. In the first debate sixty per cent. of the time was spent in discussing the relay services, and in the recent debate about thirty per cent. of the time.

The B.B.C. is disappointed at the rejection of Sir John Reith's proposal that a Cabinet Minister should be made responsible for "cultural aspects" of broadcasting. I am inclined to agree with the Postmaster-General that it is difficult to conceive responsibility without control, and the B.B.C. would have lost some of its independence.

But in fairness to Sir John I must explain that his idea was to avoid the sort of misunderstanding that has arisen in the past because the Postmaster-General is outside the Cabinet. He wished the B.B.C. viewpoint to be represented directly inside the Cabinet, so that, for example, if the Government vetoed a certain broadcast, it (and not the B.B.C.) would acknowledge responsibility.

UNBIASED

By FREE GRID

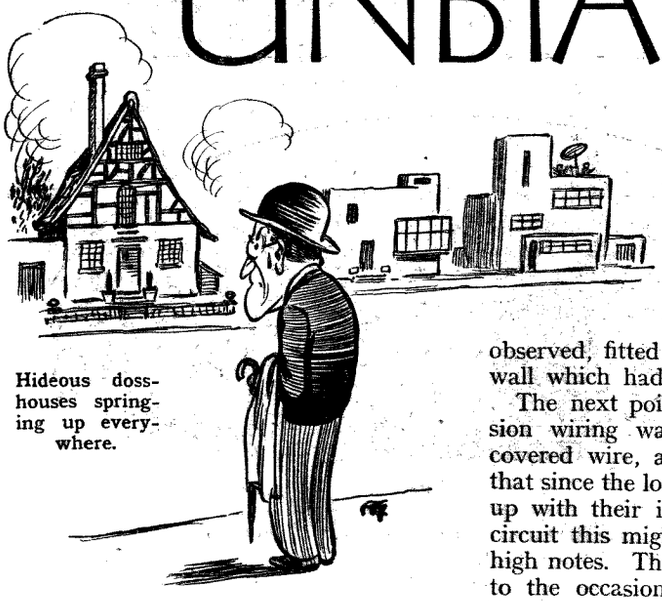

Hideous doss-houses springing up everywhere.

Tudor Wireless

THE great building boom which started soon after the war still seems to be going merrily on its way, and while, I suppose, none of us has any right to be annoyed at the desecration of the lovely English countryside by the hideous doss-houses that are springing up everywhere, it is surely time to call a halt to some of the pseudo-Tudor style of architecture which is being adopted. It is not that I object to the exterior of these houses over-much—they are, I suppose, no more repulsive than the Neo-Edwardian style—but it is time to complain when an attempt is made to bring the interior comfort also into line with Tudor standards. I refer more particularly to the wireless arrangements which are appearing on certain of these wretched "estates."

There are purists, of course, who would argue that wireless had no business at all in any house purporting to be of the Tudor period, and I must say that I most heartily agree with them provided that they are prepared to go the whole hog—using the latter term *literally*—and exclude main drainage and bathrooms also.

In the case of a new "Tudor" estate over which I was conducted recently the builders' salesman evidently took me for one who was about to embark upon the stormy and uncharted seas of matrimony instead of as an old and hardened mariner, for he expiated at great length on the delights to be derived from the navigation of this uncharted sea, which he likened to a millionaire's yachting cruise rather than to the westerly doubling of Cape Horn in an old-time windjammer, as it really is.

However, it is the wireless arrangements with which I am concerned. In the first place, the wretched mirror which the builders of these villas stick up over every mantelpiece at the slightest provocation had been replaced by a loud-speaker grille, behind which was a loud speaker with a half-starved looking permanent magnet which, as the salesman rightly observed, fitted *snugly* into a hole in the wall which had been scooped out for it.

The next point was that all the extension wiring was carried out with lead-covered wire, and I ventured to remark that since the loud speakers were all wired up with their individual transformers in circuit this might cause a certain loss of high notes. The salesman was fully equal to the occasion, however, and was evidently not entirely devoid of technical knowledge, for he quickly replied that with the increasing power and increasing number of stations that might be expected in the next few years this was highly desirable in order to ensure better selectivity.

I thought that the item which really crowned everything was the receiver itself, which was of the battery-driven type, a large number of which had clearly been picked up cheaply as a job lot by the builder. Even in this case, however, my guide and mentor was not at all at a loss for an answer. He explained that these had been provided because in the event of a war the enemy 'planes would undoubtedly bomb all the power stations, thus putting mains-driven sets completely out of action and cutting their owners off from the vital messages which would be broadcast by the Government. I silently raised my hat to him and ordered two houses on the spot.

Another "Lost Chord"

I HAVE hitherto always regarded "The Lost Chord" as being a bit far-fetched in its account of the state of affairs which it postulates. Not that I have any doubts about the organist feeling "weary and ill at ease," for I have often felt in that condition myself, more especially after an argument with Mrs. Free Grid or when tossing and turning in my bed after finishing up a tiring day with an unusually heavy helping of tripe and onions.

The part of the song which has always stuck in my gullet is that which tells how the organist accidentally struck a chord of marvellous beauty and then, forgetting to jot it down, spent his life in a vain and elusive search for it. Now, the whole thing is obviously absurd, for great as is the number of notes, and therefore of possible chords, on an organ, it is, after all, merely a matter of permutations and combinations to arrive at them all, and any mathematician could have worked out for him exactly how long it would have taken to have gone through the lot, by which means, of course, he would have been bound to have rediscovered the wretched thing.

However, in spite of all this I am inclined to be less dogmatic in the matter after a recent experience of mine when sitting in front of my newly built television receiver idly twiddling the knobs and wondering when my patience would be rewarded by a glimpse of the first experimental transmission from the Alexandra Palace. Whilst engaged in this pastime the other Sunday I was suddenly startled to see on my screen something which, if not a thing of beauty such as the organist stumbled upon, was far more interesting.

The picture which suddenly flashed on the screen was something entirely out of the ordinary and of a type which caused me hastily to shut and lock the door of my wireless den for fear one of the little Grid Leaks should accidentally stroll in. Not, mind you, that there was anything in it at which the most narrow-minded censor could object, but there are, after all, many things in life, such, for instance, as pubs, which are all that is desirable but which are quite rightly barred to children. Fortunately, I had the presence of mind to make an immediate recording of the accompanying speech, but I regret to say that my home cine camera has not yet been rigged up for recording vision.

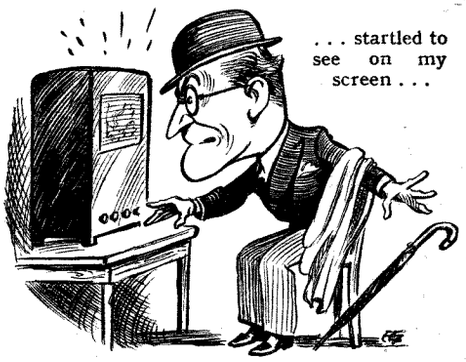

. . . startled to see on my screen . . .

Now comes the curious part. Having an engagement to speak that evening at the local Mothers' Meeting I switched off and deliberately twirled the knobs of my set before departing, for fear one of the little Grid Leaks should stroll in and switch on. Unfortunately, I forgot to make a note of the dial settings, and try as I can I have been unable to find the station again, even though I have repeatedly tuned through the whole gamut of frequencies covered by my set. Furthermore, neither I nor any of my friends have been able to identify the language used in the recording. It is true, of course, that the number of languages spoken in the world is considerable, India alone being responsible for over two hundred (222 according to the Simon Report), but for obvious technical reasons these can be ruled out. For the moment I am in no better condition than the unfortunate organist of whom the song relates, but I have not yet sunk so low as to make a song about it.

The Home Laboratory

I.—The End and the Means

The author in his own laboratory.

THE first of a short series of articles dealing with experiments—and the means for making them—that are within the scope of the average keen amateur. It is emphasised that worth-while results can be obtained from the simplest of apparatus, if used intelligently and with a little inspiration.

By M. G. SCROGGIE, B.Sc., A.M.I.E.E.

NO doubt a reasonable claim to be a photographer could be advanced by a person who did no more than make the exposures, leaving the developing and other necessary work to others. His sole equipment might then be a camera. But there is no doubt that we expect a photographer worthy of the name to have a well-equipped dark-room and to take a serious interest in the means by which his results are obtained.

In the same way, the genuine radio amateur is expected to have his laboratory, and to take at least as much and probably more interest in the means by which reception is achieved than in the results themselves.

It is difficult to say how much is necessary in order to constitute a laboratory. It is really not so much a matter of cost or quantity of equipment as of the use made of them. A comparatively small collection of volumes used and treasured by a book lover has more right to be called a library than the most imposing galleries lined with dusty tomes. And a corner of a living-room, with a few simple home-made instruments might be more truly a laboratory than the most gorgeous plant without inspiration. If one has any doubt about this it is only necessary to see, in the South Kensington Museum and elsewhere, what simple devices were used by Faraday and other great experimenters.

Ultra-short waves offer much scope for experiment, as proved by the popularity of field days. The photo shows Col. Ashley Scarlett and Mr. Keeling with the largest and smallest 5-metre sets used at a recent field day organised by the Golders Green and Hendon Radio Scientific Society.

Although the keen experimenter's dream is to be able to order everything in the Sullivan or Muirhead or General Radio catalogues, it is actually quite good fun making the best of a severely restricted budget. As in practice we all have to do this, it is well to consider what sort of experimentation we propose to do, because that obviously has a close connection with the equipment. One would not set out to investigate the properties of directional aerial arrays in a small flat. Nor would one attempt to study the relationship between modulation depth and harmonic distortion with the aid of a few shillings and a smattering of theory. On the other hand, it is possible to make what might prove most valuable observations with little more than an ordinary receiver. The "Luxembourg Effect" was not discovered by means of elaborate and costly apparatus, nor was it predicted as a result of intricate mathematical calculations; the equipment was a broadcast receiver and slightly more than average observation. One does not need to have much observation to have more than average.

Signal-strength Meter

Yet here was a discovery that gave the highbrow scientists a valuable new line of approach to the problems of the ionosphere. There is quite a lot of work that can be done without apparatus, other than a receiver. Of course, it is much better for such a receiver to be additional to the one used by the family. It is essential that it should be kept at a constant level of efficiency, which is to say that it should not be touched by anybody else. And for most observations it is very helpful if some sort of output meter is available. The ordinary sort that measures the audio output is not of much use when making observations on broadcasting stations, with their constantly changing modulation depth. Something that depends on the carrier wave is wanted—a valve voltmeter in parallel with the detector, or even the detector itself furnished with a suitable meter; or, if A.V.C. is included, a "tuning indicator," consisting of a milli-

The Home Laboratory—

ammeter indicating the anode current to the controlled valves. The receiver should be conservatively designed, not one in which everything is working to the limit or beyond; stray reaction should be negligible so that results are consistent. The main thing is that the receiver is utterly *reliable*.

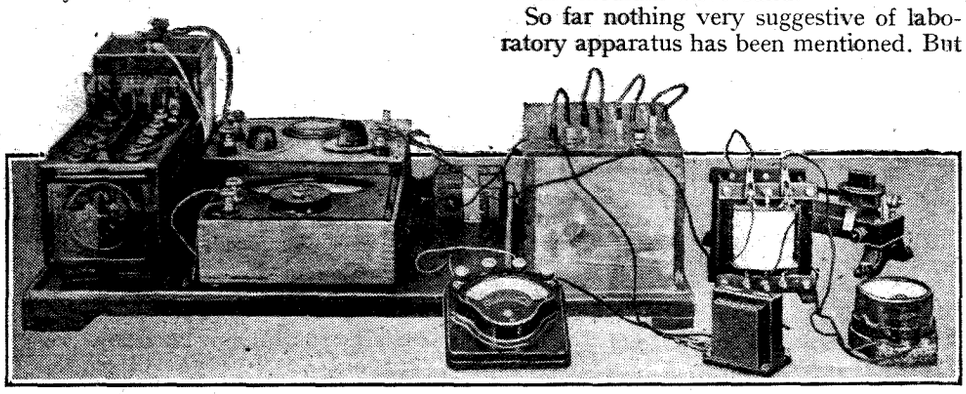

This kind of "hook-up" may look crude, but useful measurements may be made with its help.

With this equipment the experimenter can make systematic observations on such things as the influence on reception of time, season, weather and astronomical phenomena such as eclipses, and how wavelength and situation of station enter into the results. This is work which is most likely to be fruitful if it is co-operative, and there are organisations that arrange for and collect data taken over a wide area.

Experiments with Aerials

It is the short waves that, for various reasons, amateurs have always found the most fascinating. Just now attention is especially focused on those below 10 metres. In addition to purely observational work, ultra-short waves offer the most scope for experiment, as the popular 5-metre field days indicate. There is still room for plenty of investigation of the effective range of these waves. And as a whole wavelength is only 16 feet it is practicable to test and compare various types of resonant aerials without necessarily having at one's disposal enough land to make an aerodrome.

All this sort of thing can be done without making heavy demands on apparatus. In fact, this type of experimental work is far cheaper than the construction of modern broadcast receivers! Even transmitting is included in this statement. A complete ultra-short wave transmitting and receiving station costs less than a mediocre superhet. That is not to say that one cannot go in for even more elaborate gear on these waves than on the medium and long. There is television, of course; a complete television receiver is likely to remain beyond most purses for some time to come, but there is no reason why less wealthy amateurs should be excluded; they can concentrate on such important departments as anti-interference aerials or wide-range amplifiers.

And, of course, the design of broadcast receivers is not yet dead. Some time ago *Punch* showed pictures of (1) the old High Street (densely packed with traffic), (2) the new by-pass (spacious and empty), (3) ditto, a little later, crammed from kerb to kerb, (4) the old High Street (almost empty). When the crowd have rushed into short waves there is all the more chance for those who have stayed behind on the medium-wave band.

So far nothing very suggestive of laboratory apparatus has been mentioned. But even when one's choice of experimental work can be carried on with only a receiver, it is at least desirable to have something of the nature of a laboratory, if only for keeping the said receiver in trim. One is very restricted without some means of producing an artificial signal when required, measuring wavelengths, and checking capacities, resistances and inductances. Meters for checking circuits and taking experimental readings, oscillators of various types, and controllable power supplies are constantly needed whenever general experimental work is undertaken; and if one's resources are not by this time entirely exhausted they can profitably be devoted to the more difficult types of measurement, such as distortion and HF resistance, and perhaps even to a cathode ray tube.

But whether the experimenter can afford much in the way of equipment, or very little, there is always plenty that he can do with it.

Voigt Outdoor PA Loud Speaker

A Weatherproof Unit

THE methods which are generally adopted for making a loud speaker weatherproof are not always consistent with the preservation of good quality of reproduction. Boxing in the back, while it gives adequate protection, also introduces a "compliance" which may seriously affect the response not only of the bass but also of the lower middle register.

Messrs. Voigt Patents, Ltd., The Courts, Silverdale, London, S.E.26, have tackled the problem from a different angle and have produced a weatherproof unit with the same good quality of reproduction as their domestic loud speaker—at least, as far as frequencies above 200 cycles are concerned. The type of musical items usually played at outdoor meetings suffers little from the bass cut-off inevitable with a horn only 2ft. square and the quality of speech is excellent.

The front of the diaphragm is protected by a metal grille and the back is open. A heavier material is used in the construction of the diaphragm, the whole of which is treated with waterproof varnish, and to judge from the accompanying photograph, which was taken with speech current flowing, the unit should be capable of withstanding any rainfall likely to be met with in these latitudes. To demonstrate the robust nature of the construction, the same unit was despatched to us for test through a carrier agency without special packing, labels being merely tied on the horn and moving-coil units. Both withstood this treatment without damage.

Centring spiders are often a source of trouble in PA speakers due to the large amplitudes developed when considerations of economy result in each unit being made to cover as wide an area as possible. To ensure freedom from breakdown on this score a new type of centring device has been evolved consisting of an arrangement of levers giving free parallel axial movement without lateral play. The unit will stand up well to the 12-watt output of the "*Wireless World* PA Amplifier" and the high electro-acoustic efficiency results in a really inspiring volume of sound at this output level.

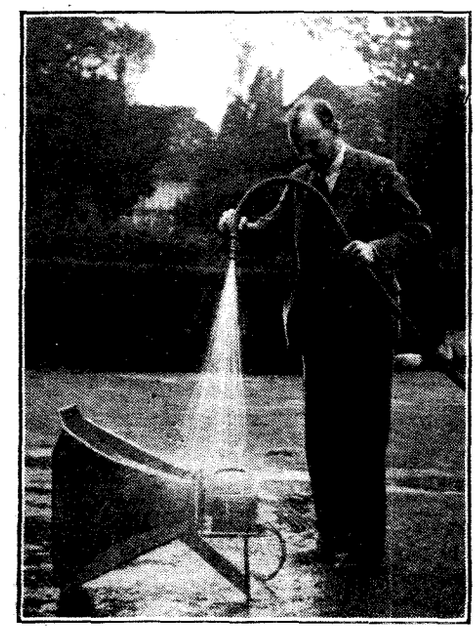

The Voigt PA speaker undergoing a severe test for waterproofness while being supplied with field and speech currents.

The price of the protected unit alone is £18 15s., and of the horn £2 15s., and there can be no doubt that for this a speaker has been produced which will justify the use of the best amplifiers and microphones available.

COLLARO RADIOGRAM UNIT

IN connection with the review of this unit which appeared on page 47 of the July 10th issue, we are asked by the makers to point out that the price as a radio-gramophone unit is £4 7s., and that the unit is fitted with the No. 36 pick-up.

BROADCAST BREVITIES

NEWS FROM PORTLAND PLACE

Brookmans Park Calls Wales

LONDON Regional, despite its comparatively local range, has audiences in Wales and the Channel Islands. This surprising discovery has been made following the record response to an appeal made by the organiser of London Regional Children's Hour on June 8th last for Country Holiday Funds.

Birmingham, Too

The replies, so a census reveals, came from all the English counties except Rutland, Northumberland, Cumberland, Westmorland and Durham. Naturally, London and the Home Counties were well represented, but, quite surprisingly, Birmingham had a big showing, proving that Midland listeners are not tied to the apron-strings of their local station. Devonshire, as the census showed, has a large number of listeners to London Regional.

A Record Response

In all, there were about 4,000 subscribers, some 730 of them preferring to remain anonymous. Contributions were in stamps, farthings, pennies and silver, and included Treasury notes and cheques. The total was nearly £900, which easily beats all previous records for this type of appeal. The nearest approach was at Christmas, 1934, when £754 was subscribed.

New Charter in Parchment

WILL life at Portland Place be very different under the new Charter? Probably not, for the change-over will not be nearly so epoch-making as in January, 1927, when the Company awoke one morning to find itself a Corporation. Even so, there will be excitement and bustle in the B.B.C.'s administrative offices, for the beautiful new Charter, plainly writ on parchment, will be enshrined in its appointed place in the accountant's safe. Actually, this will be an exact copy of the Charter duly delivered to the Records Office.

Governors Resign

When the present Charter expires, all the Governors automatically resign; no doubt several of their number will equally automatically rejoin.

In the main, one could safely wager that the Corporation will be pursuing the same path a year hence. The only difference will be that more money will then be finding its way into the television coffers and less into sound broadcasting. What is lost on the Portland Place swings will be saved on the "Ally Pally" roundabouts.

A Menace to Television ?

TALKING of roundabouts, there are at least two of these quite near to the television transmitting station, together with a "bumping motors" sideshow which emits sparks of terrifying size and frequency—from the technical point of view. The engineers in the nearby Palace are, in fact, wondering whether the brief, bright sessions in the bumping motors (6d. a ride) could be further curtailed if they interfered with their work.

Snakelike Feeders

Patrons of the little *biergarten* in the grounds now see, as they raise their glasses, a splayed out "umbrella frame" formation at the head of the mast, this being to support the vision and sound arrays, which should be ready in less than a week. Like twin snakes, the copper screening tubes for the aerial feeders insinuate themselves through the walls of the transmitter halls, round corners and up the centre of the mast to the summit.

OLYMPIC GAMES. During the rehearsals for the display to be given at the opening of the Games, a special light-weight short-wave transmitter has been used by the producer to enable him to give orders from any part of the Stadium.

ANTI-NOISE MICROPHONE. A Telefunken crystal microphone mounted with the pre-amplifier in a tube and wrapped in sponge rubber to exclude vibration, will be used by the commentator in the motor launch following the crews at the Olympic Regatta.

Television in Operation

At one time or another most of the television productions staff had seen television before the demonstration at Alexandra Palace last week, but this, the first official occasion, gave them an excellent opportunity to assess the merits of modern high-definition work under the best possible conditions.

It is not an exaggeration to say that the experience has filled them with even greater zeal than they already possessed. It is now clear that television, far from being a mere laboratory experiment, can now offer real entertainment value and give full scope to the artistic ideas of the producers and their assistants.

The Tenth London Announcer

LISTEN for a new voice next week and try to spot the new announcer, Mr. K. I. Maconochie, who has just joined the B.B.C. staff. It will not be a so-called Oxford accent; for Mr. Maconochie was educated in London and then went to France, where he did considerable writing. He has also been a private schoolmaster and tutor and conducted statistical investigations for a well-known commercial undertaking. He has travelled widely, and if a knowledge of the world is the best form of education, then Mr. Maconochie is well fitted to take his place among the aristocracy of broadcasting announcers. He will be "Number Ten" on the staff, which is headed by that doyen among announcers, Mr. Stuart Hibberd.

Autumn Programmes

THE main changes in the much-discussed autumn programmes revisions will be the introduction of dance music in the daytime for the benefit of night-shift workers; broadcasts from rehearsals of the Symphony Orchestra where a straight "play through" is possible, but omitting any of the conductor's instructions; and the use of Empire programme items in the home services.

More News Broadcasts

News bulletins are to be broadcast at 6, 7, 9, 10 and 11.30 p.m. "Music Hall" will be shifted to 9.20 p.m. on Saturdays to enable shopkeepers and shop assistants to hear a programme from which they have hitherto been debarred owing to the lateness of their closing time. The "Saturday Magazine" is to be moved to 7.30 p.m. on Saturdays.

Sunday Dance Music

Promenade Concerts will not be given in full, except on one night of the week; on other nights one or two items only will be broadcast, to suit the balance of programmes. Empire relays will be included whenever possible, and the Test Matches in Australia will be described from the ground by the Australian cricketer, Alan Kippax, at 8.0 a.m. Concert versions of dance music will be played on Sundays by combinations other than dance bands. Other Sunday items will include: plays; theatre orchestra features; suitable outside broadcasts; and talks, secular as well as religious.

Better Distribution

Some of the changes will come into operation on September 13th; some on October 4th; and others as and when opportunity permits. The main changes are not being made precisely with the object of providing more light entertainment, but rather to obtain better distribution of programme material.

Control

A JOY TO HANDLE— OR THE REVERSE

By

"CATHODE RAY"

WHAT are the distinguishing features of a good receiver? Surely the ability to select programmes from over a wide range, and to reproduce them with a close approach to the original tone and volume without interference; which characteristics may be summed up in the four words on which I wrote last October—Sensitivity, Quality, Volume and Selectivity. To these the cautious would add *Reliability*, for the most creditable technical performance is apt to be obscured in an atmosphere of persistent breakdowns and repair bills.

The first four features can be measured scientifically, so that the capabilities of different receivers may be compared easily and accurately without introducing the vagaries of individual judgment and local conditions. Reliability is not a quantity that can be read off a meter, though something can be done with "accelerated life tests."

The technique of measurement has done much to push forward the development of performance, which has now reached a very advanced state. But of two specimen receivers, each having equally excellent performance, it might not be too much to describe one (in popular nomenclature) as a dream, and the other (equally popularly) a ———. The difference would be in *Control*.

Car Designers Should Imitate Us

More attention seems to be given to this in the sister (or aunt?) trade of Motors. A review of a new car invariably devotes a considerable proportion of space to the steering and other controls. Not that the motor people have nothing to learn from radio practice, for the idea of grading an "accelerator" so as to give something like equal increments of power, speed, or anything else, for each quarter-inch the pedal is depressed seems never to have occurred to our car manufacturers; or, if it has, it was rejected on the ground that the present absurdly non-linear characteristics sustain an illusion of the "terrific" acceleration described in the advertisements. But although in radio the matter of control has been partially developed on more scientific lines, it does not seem to me that it gets the attention it deserves when the merits of this and that model are being discussed.

One reason for more carefully considering control is that performance has been so largely developed, and to some degree standardised, that scope for further improvement lies increasingly in refinements. "We could not improve the tooth-paste so we improved the tube" kind of thing. Another is that it is possible for much of the vaunted performance to be thrown away through ill-conceived controls. It can no longer be assumed, as it once was, that the operator understands what he is doing when he turns the knobs. The motor manufacturer who had refused to provide synchromesh gears on the ground that he personally could make a perfect "change" with the old sort would have lost a lot of sales by now, if not his entire business. Even the technician dislikes a receiver with bad control, though his skill may enable him to get everything out of his set that it has to give —he may in fact dislike it more violently than the general public because he knows how much better it could be.

How ought control to be arranged? It ought, of course, to provide for the changes of wavelength, volume, and so forth, that are necessary or desirable. It ought to provide these facilities in a logical and effective way, so that without mental or physical effort the operator gets the best results from the receiver. The early sets, with several separate tuning dials, could hardly be brought to the best combination of adjustments even by an expert unless he had a wavemeter. There were other knobs in plenty—all plainly marked, perhaps, but only in such terms as "Reaction" or "Aerial Circuit Coupling," which bore no obvious relation to the effects which were produced, such as loudness, stations, or freedom from interference.

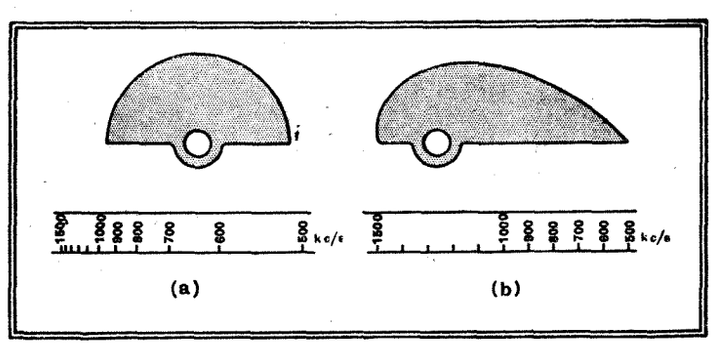

Fig. 1. An example of how correctness and simplicity on the front of the control panel must often be achieved by less simplicity behind. The simple semi-circular condenser vane (a) leads to the malformed scale shown below (11 station channels between each pair of marks on the scale). To get the uniform scale (b) it is necessary to adopt the less simple condenser vane shown above.

One Knob: One Job

In the perfect receiver each separate control—or at any rate each separate movement of a control (for sometimes one knob is made to do different duties according to the way it is moved)—should have a single function that becomes immediately obvious on operating it. When one approaches a receiver the natural impulse is to turn all the knobs and see what happens. It is confusing if, for example, the selectivity control alters the volume, or the volume control shifts the tuning. One would not favour a car in which the clutch pedal also turned on the headlights and opened the doors. Some change in tone is perhaps inevitable when the selectivity is altered, but even that can be greatly minimised. If one knob is turned and found to make the programme louder or softer, then the operator should be justified in assuming that it is the volume control that he has got hold of. Ideally, no other control should have any effect on volume. In practice it is difficult to prevent the tuning control from doing so, but even that can be managed. It can also be arranged that the tuning control has no effect on the tone. Self-centring circuits (automatic tuning control) assure expert tuning for all.

To achieve this ultimate simplicity in operation the apparatus behind the panel must unfortunately be very complex. But that is no excuse for slipshod controls even in the simplest and cheapest type of receiver. The reaction control, for instance, is fortunately obsolescent; but where it is needed to make the best of a simple type of receiver it should at least not display the vulgar error of causing oscillation over the major portion of its adjustment, or of varying greatly in effectiveness according to the wavelength.

Control—

The obvious—but too often unconsidered—requirements of convenient manipulation and smooth but steady and firm mechanical motion can be met, just as in the more advanced types of control.

It is no sign of good design if one knob moves so slackly that it will hardly stay put, another obviously moves a contact over some uneven surface, another moves in jerks, and a fourth is so stiff as to hurt the fingers. All should set a uniform standard in smooth, steady movement.

These mechanical properties ought to be matched by the electrical. Quite early in the art it was realised that the type of tuning condenser that is simplest as a condenser is most troublesome as a control, because of the very non-uniform distribution of stations, which are crowded at one end and sparse at the other. So the "straight-line-frequency" condenser was devised (Fig. 1).

The "uniform" volume control similarly is far from uniform in its ultimate effects on the ear, so the "log" control was advertised and in some cases approximately manufactured. There are still many receivers in which most of the control of volume is concentrated in a small angle of knob movement. And it is not enough to have uniformity; a uniform gradation from loud to abominably loud is no good; the range must be right. This necessitates good AVC, with a delay voltage so chosen that when the volume control is *nearly* at its MAX end all normal stations give the full undistorted volume of which the set is capable (Fig. 2). The little extra in hand is for abnormal stations, or to let the owner feel he is not working the set "all out." The remainder of the adjustment, down to MIN or OFF, is then available for gradual smooth fading out, or down to any desired level short of maximum.

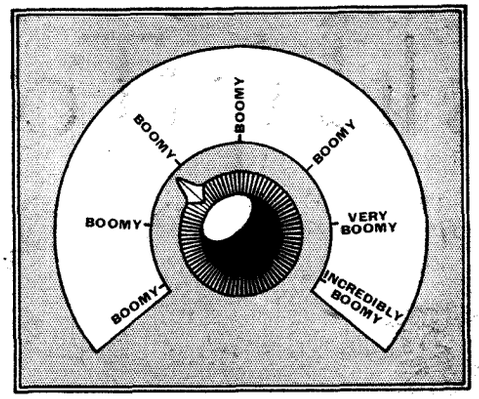

Fig. 3. If tone controls were fitted with a printed scale, many of them would have to be like this.

Tone controls, where fitted, are almost invariably open to criticism both as regards gradation and range (Fig. 3). The standard to aim at is much more controversial than in the case of volume control. But most of those actually in existence do not even come within the boundaries of controversy.

Selectivity, if it is worth controlling at all, is worth controlling well. For what is meant by "well," see my remarks of October 11th last on Variable Selectivity. The companion adjustment for quelling interference is a noise suppressor or Q-level control. In conjunction with AVC it is possible to arrange things so that any station too weak to be heard above the general noise is suppressed entirely, and all above that level are sent through at equal strength.

As for tuning control, what can one say? At least it must be admitted that manufacturers have tried (see "The Ideal Tuning Scale," 3/1/36). The findings in that discussion were that a tuning control should have an easily and fully visible scale, with station names, and should be related to the waveband switch in such a way that operation of the latter brings the appropriate scale into action. That, incidentally, is the manner in which the activities of the waveband switch are made self-evident, and, apart from sure and silent contacts and smooth action, is about all one asks of it.

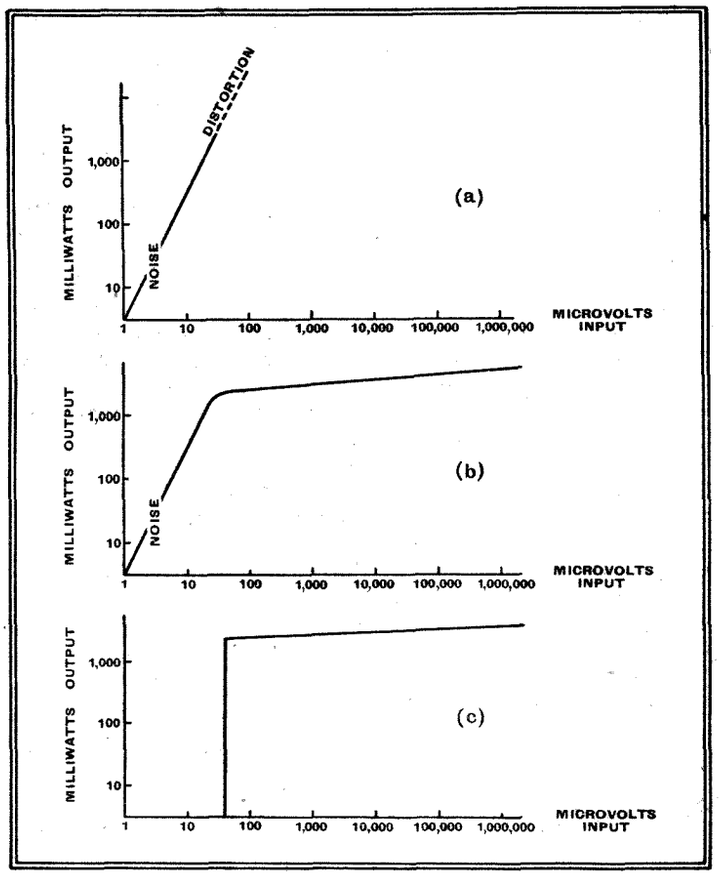

Fig. 2. (a) When a sensitive receiver is unprovided with AVC, reception of very weak stations is marred by noise, and almost all others are bound to be distorted unless the hand volume control is used more or less drastically. (b) Effective AVC with a suitably chosen delay voltage puts gross distortion out of the range of adjustment whatever the signal strength. (c) QAVC ensures that noise-ridden programmes are entirely suppressed and all others appear at practically uniform strength.

HYVOLTSTAR "FOUR"

An All-Wave Superhet with a Reflex Circuit

ALTHOUGH of considerably lower price, this receiver nevertheless shows its relationship with the Hyvoltstar "Ten" and "Eight" models previously reviewed by its high overall magnification.

We have had an opportunity of trying out this set for a short period, and had we not been previously acquainted with the circuit diagram, it would have been easy to have been deceived into thinking that at least five or six valves were responsible for the range available and the "punch" delivered by the loud speaker.

The short-wave range covers 16.5 to 52 metres, and if a certain amount of second-channel gives the impression at first of a scale more densely populated than is really the case, the true performance is nevertheless obviously more lively than that of the majority of small all-wave superheterodynes.

Band-pass tuning on the medium- and long-wave bands and a single tuned circuit on short waves precede the octode frequency changer, which is followed by a pentode acting both as an IF amplifier and first LF stage. Signal rectification is effected by a Westector, which also provides the AVC bias for the first stage. The output valve is a power pentode, and the heaters of all the valves are, of course, of the high-voltage AC-DC type.

The controls have been simplified and there is no neon tuning indicator, but the wide-range tone control and the two-speed tuning dial with a fine adjustment ratio of 100: 1 have been retained.

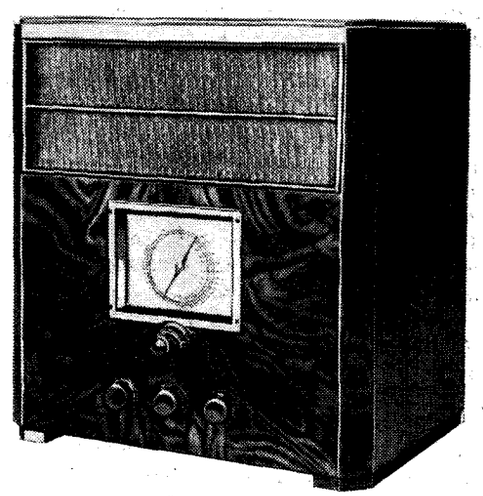

A reflex type circuit gives the Hyvoltstar "Four" a lively performance.

The price of the set is fifteen guineas, and the makers are Universal High Voltage Radio, Ltd., 28-29, Southampton Street, Strand, London, W.C.2.

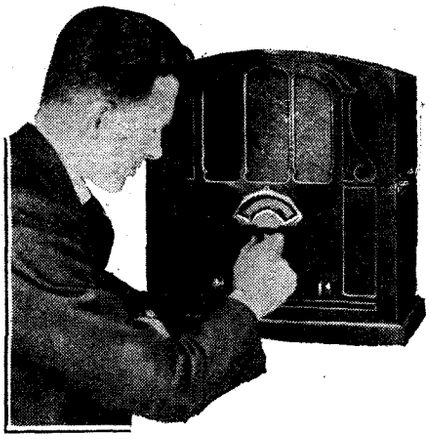

Is It Up To Standard?

POINTS TO REMEMBER IN ASSESSING THE PERFORMANCE OF A RECEIVER

CONDITIONS, both local and etheric, have such a profound influence on the performance of a wireless receiver that it is never easy to come to a definite conclusion as to its behaviour. This article, though perhaps most useful to the would-be buyer of a set—and especially of a second-hand set—contains much advice on this subject that is useful to all wireless users.

THE ideal method of determining the worth of a receiver is to take it into a properly equipped laboratory and get actual numerical results showing what the set can do and not do, and how it compares with accepted standards. That, of course, is a council of perfection; in ordinary practice it is very difficult to make a trustworthy estimate of the receiver's performance, because not only are such things as standard signal generators lacking, but it may not even be possible to carry out the test on one's own home ground. The conditions may be largely unknown, and familiar standards of comparison, therefore, absent. All the more need, then, to consider how to set about the job properly.

For the purpose of illustration we will first take a simple HF-det.-LF receiver—not that it is any longer the standard British set, but because it serves admirably as a starting point.

Taking a battery-fed model as an example, it is obviously desirable to give the set every chance by making sure that the batteries are "up" and that aerial and earth are properly connected. Anode currents may be checked and bias adjusted to give the best compromise between extravagance on the one hand and starvation on the other. A good idea of the maximum volume obtainable (an important point in any battery set) can be had by carefully advancing the volume control up to the point where any further increase results merely in distortion—or even in a slight falling-off. It is like an oil lamp which, if the wick is turned up beyond a certain optimum point, smokes (distorts) and gives less light (volume) than before.

From Speech to Orchestra

In judging volume, it is hardly possible to take too much account of the nature of the surroundings. A very large room full of things (*e.g.*, a showroom or store), a predominance of sound-absorbing surfaces—curtains, upholstery, people—or a background of noise—machinery, traffic, conversation—all reduce the apparent volume to a small fraction of what would be heard in a small quiet room. And in considering tone, listen to some *representative* programmes, including at least speech, piano, and full orchestra; preferably not records or "O.B.s."

The next thing is selectivity. This is where a good deal of judgment, mixed, unfortunately, with guesswork, is necessary if the test is carried out, say, in central London with an outdoor but badly screened aerial, whereas the set is to be installed in Bournemouth with a good outdoor aerial. In some places there are two medium-wave local stations within a few miles; in others only one medium-wave local, the other being Droitwich. Others, again, have no locals within "swamping" distance.

When the situation of the test is different from that of ultimate use, it is necessary to visualise the latter all the time and try to make allowance for the various differences. Contrary to what is sometimes affirmed, greater selectivity can be obtained with a large aerial, because the wanted signal, as well as interference, is picked up more strongly and the coupling can then be made looser, thus improving true selectivity. In trying to estimate if a certain station, not working, would be interfered with by another station which is working at the time of the test, remember that a *weak* background of the unwanted station is destroyed by the carrier wave of the wanted station, quite apart from any audible shouting-down.

Assuming the most usual condition of two medium-wave locals, obviously the minimum requirement is that each of these should be obtainable at full volume without the other. Even a "genuine antique" should be able to do this with appropriate adjustment of the selectivity control. A simple "det.-2 LF" set would probably require a touch of reaction.

Then, by using full reaction and cutting down on "selectivity" or "volume" you can see what else can be received at useful volume without local interference. Here, of course, due allowance—a very large one—must be made for the daylight-darkness effect. During daylight the problem is to bring the stations in; after dark it is to keep them out. Previous observant experience with any set at different times of day and year will show one what to expect. In the London area it should at least be possible to receive Hilversum on 301 metres when both locals are on.

A special point to watch, particularly in the type of set taken as an example, is medium-wave break-through. Set the tuning near the low end of the long-wave band when the medium-wave locals are working, and note whether they break in. The results must be judged in the light of what you intend to get in this region; unless one is specially interested in aircraft stations, Luxembourg may be the lowest station on this band to be seriously considered.

Selectivity tests having been completed, it is likely that sensitivity, or range, has automatically been covered. For further information it is sometimes worth seeing what can be received with an indoor aerial (the outdoor aerial, if any, being kept at a distance and preferably earthed). And when a frame aerial set is being tested, remember that reception may be almost nil inside a modern steel-framed building; so beware if it is to be installed in a block of flats!

Some Small Details

How do the controls work, mechanically and electrically? Are they smooth in both respects? Is the wave-change switch noisy when waggled slightly during a programme? Is the volume control, if any, noisy? Is reaction "floppy," making it difficult to adjust to a sensitive position? This test must be made at intervals all over both wavebands. And put down a bad mark if at any point there is threshold howl. Is there any backlash in the tuning controls? If calibrated, is the scale accurate, and is its accuracy affected by different aerials or by reaction or selectivity controls? Give the set a shaking and see if any loose contacts or connections are revealed by noises from the loud speaker. Tap the detector valve and note whether there is a tendency to sustain a microphonic ring. Run it at full volume and listen for speaker rattles. If at all possible, put a few hundred ohms resistance in series with the HT battery (assuming it to be a reasonably fresh one). There should be no serious deterioration in tone, though there may be a drop in

Is It Up to Standard?—

volume. Certainly, there must be no continuous howl with anything less than 1,000 ohms. When testing the reproduction of a set employing a Class B or QPP output do not fail to observe it at all volume levels, as distortion may be bad at a low level.

Quite a considerable point with an oldish set is the likelihood of replacing valves or other parts. If the valves are quite obsolete one may be forced to alter the receiver extensively. And *that*, with a really old set, is seldom worth while.

A mains version of a similar type of set calls for similar treatment, with the important addition of a hum test. The hum level depends very much on the nature of the supply, and may be many times greater in some places than others, or even at different times of day (when different plant is in use). But the important thing to remember is that any of the conditions already mentioned as mopping up the apparent volume are quite unsuitable for judging hum. Unless the set is to be invariably heard in a noisy place one *must* estimate hum in a really quiet room. Observe it under various conditions—mains plug reversed; earth on and off; a powerful unmodulated carrier tuned in (for modulation hum).

Exposed "Live" Metalwork

Finally, the question of safety. Try touching all exposed metal parts (not forgetting grub screws in knobs) with an earthed wire and with the mains plug each way round. A very small spark need not give rise to alarm, but anything like a splash or a blowing of fuses cannot be tolerated. AC models almost always survive this test, but not all DC or "universal" sets.

One other example may be taken, to represent the more modern classes of receiver. Here it is:—

Four-valve AC superhet-heptode frequency-changer, variable-mu pentode as IF stage, double-diode-output pentode, full-wave rectifier, tuning control marked with station names; wavechange switch (long, medium, and gram.); volume control and on-off switch; tone control; internal moving-coil permanent-magnet speaker; aerial, earth, pick-up, and external speaker sockets.

The intermediate frequency is a useful thing to know; it helps one to decide what particular faults to look out for. As our specimen has only a two-gang condenser—oscillator and one pre-selector—it is probable that the IF is 465 kc/s or thereabouts, and not in the 120 region, which generally necessitates at least two signal-frequency tuned circuits to ensure reasonable freedom from second-channel interference.

When the set has been switched on and warmed up, turn the volume control to zero and note the ordinary hum. The modulation hum tests can be kept in reserve for the "3 minutes" interval in the National Programme" which invariably occurs just as one settles down to listen to local-station quality. This, incidentally is the next item on our agenda. There is no lack of volume with the average present-day set, unless, perhaps, the AVC delay voltage has been fixed too low. It should be adjusted so that any station of reasonable strength is capable of slightly overloading the last valve when the volume control is set to maximum. So far from full volume being inadequate, it is more likely that the cabinet is inadequate for the volume. Look out for rattles, booms, and vibrations when running "all out."

One of the vilest products of the radio factory is the receiver which, when heard at a distance, gives nothing but a series of grunts, whatever the programme. This is due to box resonance, in combination, perhaps, with sideband cutting and a tone control set at "Low." As a certain amount of sideband cutting is inevitable

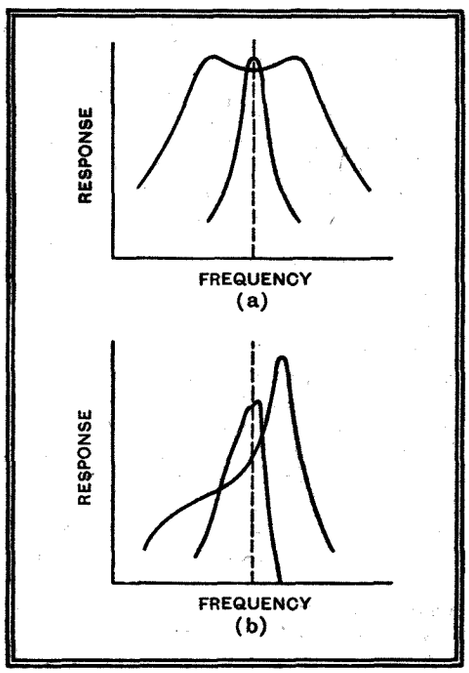

Showing (a) the responses corresponding to the extremes of adjustment of a good variable selectivity device, and (b) those of a bad one.

in order to provide for selectivity, the listener whose taste is not hopelessly depraved will most often turn the tone control to "High" and keep it there. Incidentally, it is a good point if the tone control gives a smooth variation of tone and not a change confined to a small proportion of the range of adjustment. A separate tone control is not generally included when variable selectivity is provided, because the one control serves both purposes.

Naturally, one looks for a very different standard of selectivity from that of the previous example. In fact, unless the locals are *very* local, it should be possible to get any station clear of any other—assuming, of course, that they are working at their full 9 kc/s separations and are not gate-crashers. Only very exceptional sets, with a larger number of stages, can really be expected to separate the stations working on the next channels to those in whose primary service area the receiver is situated. Most people have their pet tests. A usual one is to receive Zeesen between Droitwich and Radio-Paris. What this feat signifies depends very largely on how far off Droitwich happens to be; but success, even in its neighbourhood, may not always be taken as a recommendation. It may merely mean that the set is so selective that decent quality is impossible. That is where variable selectivity comes in. If the set possessed it you would have to pay special attention to whether the control gave a nice smooth change from a single, very sharp, highly selective, but probably horribly muffled, response to a good flat top spreading equally each side, with no acute double humps or assymmetry. And, also, that the volume was not unreasonably affected at the same time. But it is unfair to tune with it in the broad condition and then expect it to remain properly tuned when selectivity is increased; always do the initial tuning in the most selective condition.

Even a "short" superhet should have a range including the most prominent stations in daylight and almost everything at night. But it is not uncommon for the sensitivity to fall off quite badly over part of the waveband, especially the lowest wave region; be on the look-out for this. Higher sensitivity is not so much intended to bring in still more stations, but to provide plenty in reserve to keep a station up to the AVC delay voltage even during quite a bad fade, also because the more numerous stages needed for high sensitivity lead at the same time to improved selectivity, and, further, to retain a good range when a bad aerial is unavoidable.

Testing the AVC

Some attention should be given to AVC; note how many stations come in at comparable strength at a fixed setting of the volume control (making due allowance for the nature of the programmes). And, if there is QAVC, see whether a station that is only just strong enough to overcome the suppression is noticeably distorted; this is a common fault. When a tuning indicator is supplied, try it carefully on stations of various strengths; see that it is sharp enough in action and that it really does help one to tune accurately.

The various controls should be examined closely, as advised for the previous example. Pay particular attention to the calibration. If it is badly out, it gives one reason to suspect the adjustment and "lining-up" generally—a fault which leads to many of the superhet's special troubles. Apart from poor sensitivity and selectivity, whistles and repeat points are increased. Some specimens are alive with whistles from end to end of the tuning scale. There are several other causes of these beside second-channel interference.

If very close to a powerful station it requires good design to avoid a number of actual programme repeat points. It is

Is It Up To Standard?—

easy to mistake these for other and more distant stations in the B.B.C. system, but at night, when there is a practically continuous array of stations all over the waveband, such repeat points are almost bound to interfere and cause whistles.

When there are two medium-wave locals at very short range look out for a repeat point in the long-wave band. There may be oscillator harmonic whistles at the lower end of this band. And if the IF is about 120 kc/s look out for a whistle on top of Luxemburg. There will probably be second-channel whistles at medium wavelengths corresponding to twice this frequency below that of the local stations, but not when (as in our example) the IF is 465 kc/s.

Designers are getting so cunning that it is now possible to scrutinise a set most closely and not discover a single whistle or repeat point. But more often there are at least two.

Other types of receiver require their own special tests—the "all-wave" type, for instance. Conditions vary so much from day to day or even from hour to hour that it is practically impossible to form a really reliable estimate of short-wave performance. But you can find out how it "handles" and whether the tuning drive has a sufficiently low gear for precise adjustment.

DISTANT RECEPTION NOTES

IT'S curious how low-powered stations are sometimes received with considerable volume at great distances in this locality or that. The other afternoon I happened to turn the tuning dial of a not particularly sensitive set, that I was trying out, down towards the lower end of the medium-wave band. Much to my surprise I came across a transmission that was positively roaring in. It was clearly not one station, but two or more working in synchronisation, for characteristic wobble was there. The meter showed that the frequency was 1,474 kilocycles, and sure enough, my belief that I was hearing Plymouth and Bournemouth was confirmed presently by the voice of the Regional announcer. Bournemouth is 80 miles from me as the crow flies and Plymouth 190. To hear the stronger station (Bournemouth, 1 kilowatt) in the broadest daylight at tremendous loud-speaker strength would be strange enough, but it seems rather queer that the tiny 0.3 kilowatt Plymouth station at nearly 200 miles from me and nearly 110 in a straight line from Bournemouth could be strong enough to cause a pronounced wobbling effect.

This wobble is not always obtrusive if one station is much stronger than its wavelength partners in synchronised working. On 251 metres, for instance, it is often possible to hear Frankfurt quite clearly though the wavelength is shared by one station of 5 kilowatts (Freiburg-im-Breisgau), two of 2 kilowatts apiece (Coblenz and Trier) and two of 0.5 kilowatt (Cassel and Kaiserslautern).

Australia is known to most long-distance enthusiasts entirely by its short-wave stations, such as Melbourne (VK3ME) and Sydney (VK2ME). It will come as a surprise to most of them—it certainly did to me when I was chatting with an Australian enthusiast—to learn that there are over 80 broadcasting stations in that huge, though sparsely populated continent. Though her population is considerably less than that of Greater London, Australia has three-quarters of a million wireless licenses in force, despite the fact that the fee is one guinea. New Zealand also has a flourishing and progressive broadcasting service. Four high-powered transmitters are already in service and one of 60 kilowatts will shortly be opened at Wellington. Owing to the difference between our time and that in Australasia it is doubtful whether medium-wave stations in either Australia or New Zealand will ever be logged by even the most enthusiastic of D Xers here.

Yugoslavia is going rapidly ahead with a big regional scheme which will bring her broadcasting system right up to date. The scheme centres about a 100-kilowatt transmitter for Belgrade which will be relayed by a 25-kilowatt plant at Zagreb and transmitters of about 10 kilowatts in two other important towns. As the present 2.5-kilowatt Belgrade station is not infrequently logged in this country, its powerful family should provide interesting quarries for the long-distance man. D. EXER.

G.E.C. Amplifier

Model BCS.1587

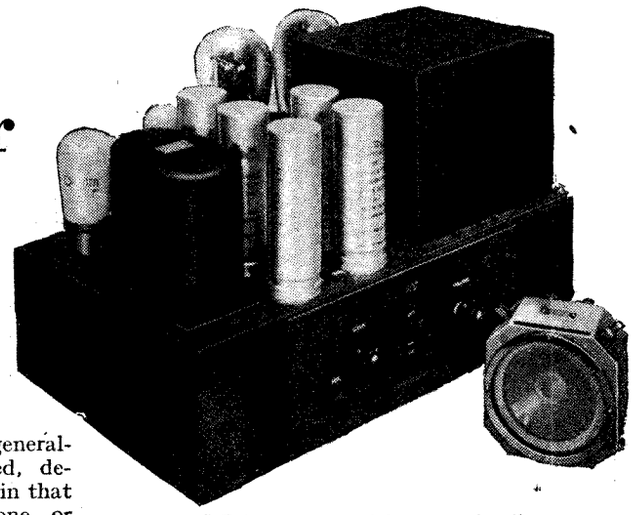

G.E.C. 14-watt AC-operated all-purpose power amplifier, Model BCS.1587, and moving-coil microphone.

SINCE fourteen watts is not an excessive output, even for home and experimenters' use, the BCS.1587 power amplifier made by The General Electric Co., Ltd., Magnet House, Kingsway, London, W.C.2, can well be described as a general-purpose model. It is, indeed, designed to be especially flexible in that either microphone, gramophone or radio signals can be put into the amplifier, while the output can be fed to loud speakers of 1.25, 2.5, 7.5 or 15 ohms impedance, in addition to which there is a separate winding on the output transformer for a 600-ohm impedance load. This may be a transmission line to distant loud speakers with suitable line transformers, or it could be used for home recording with a cutter head of the correct impedance.

The amplifier has three stages, the first being fitted with an Osram MH41 valve resistance-capacity coupled to an MH4, which, in turn, is coupled by a parallel-fed transformer to two PX25 valves in push-pull.

The three amplifying stages are normally only used with a microphone, and with radio or gramophone inputs this valve is cut out and the signals applied to the second valve in the chain. These changes are made by built-in switches.

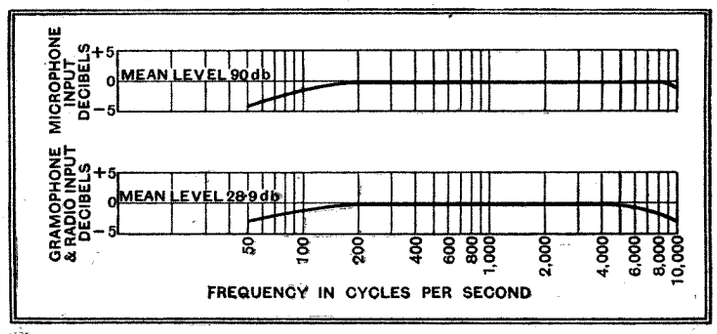

Response curves of the G.E.C. all-purpose power amplifier.

As the overall gain of the amplifier is particularly high, for it needs to be since the microphone that is intended to be used with it is a moving-coil type, an extra stage of smoothing is included for the two early stages, while the mains equipment is individually screened, with the result that the hum level is very low.

The amplifier has a very good frequency response, both with two and with three stages, as can be seen from the curves reproduced here. These are the maker's curves, but they have been verified by our own measurements and found to agree throughout the frequency range covered.

When the amplifier is used for gramophone or radio reproduction an input of 0.77 volt is required for full loading.

A useful feature in the design of this amplifier is that the microphone transformer is easily changed for one of suitable ratio to suit different microphones, though the one normally included is for the G.E.C. moving-coil model type BCS.-1580. This is a very good microphone for normal purposes and performs excellently with the amplifier.

Provision is made for operating the amplifier on 200 to 250 volts AC supplies, and the price, in chassis form as illustrated, is £25 10s. complete with valves. The BCS.1580 moving-coil microphone costs £5 10s.

There are several styles of stands available for this and other G.E.C. microphones.

Current Topics

EVENTS OF THE WEEK IN BRIEF REVIEW

Dutch Broadcasting House

THE new headquarters of AVRO, the largest Dutch broadcasting association, were opened recently in Hilversum. Over 100 miles of electrical wiring are contained in the house. The main studio is fitted with a British-built organ.

Henry Hall in Flames

SUPERSTITIOUS natives in Southern Rhodesia are said to have been greatly disturbed by hearing a mysterious voice emerge from the midst of a fiery furnace, the tone of the voice being cool, calm, and collected despite the fury and heat of the flames whence it came. The occasion was the burning down of a miner's hut which had become ignited through the overturning of a lamp. Apparently the heat had, in some manner yet to be discovered, set in operation a short-wave battery-driven set which happened to be tuned to the Empire transmitter at Daventry. The voice was that of Henry Hall, who was making his customary announcement at the commencement of a broadcast.

Extensive German Developments

EXTENSIVE development plans have been undertaken by the German broadcasting authorities, who have bought a large site adjoining the existing Broadcasting House in Berlin, and are preparing to erect a building there, which, it is said, will be one of the finest in the world. This new building will take several years to complete, and so temporary wooden buildings are to be erected in the grounds. In the meantime a new short-wave centre consisting of several transmitters has been completed at Zeesen, adjoining the existing short-wave and Deutschlandsender stations. The completion of these transmitters has been hurried forward in view of the requirements for broadcasting the Olympic Games; afterwards they will be utilised for the purpose of extending Germany's world-wide international broadcasting service.

Old Idea Resurrected

THE battery-operated portable electric radio-gramophone has once more made its appearance, this time in Germany, and will probably be seen at the Leipzig Autumn Fair. Old readers will remember that an instrument of this kind was shown at Olympia many years ago, but it apparently failed to achieve popularity.

American Amateurs Protest

AT a recent Federal Communications Conference American amateurs made a strong bid to be allowed more elbow room in the ether. Mr. K. W. Warner, of the American Radio Relay League, pointed out that the emergency communications maintained by amateurs during the disastrous floods of last March had shown once more the enormous value to the Government of an efficient amateur organisation. In view of this fact he pleaded for an extension of the amateur frequency band, pointing out that there was considerable congestion on the existing band. This congestion was so great, he said, that on one internationally used band of amateur frequencies there are no fewer than four hundred stations crowded into each communication channel. Although representing no less than 92 per cent. of the wireless stations in the U.S.A., he complained that amateurs were restricted to 7 per cent. of the wavelengths above 5 metres.

German Bright Idea

IT has been left to the German authorities to be the first to call in television to solve a difficulty which could not have been overcome by any other means. In spite of the tremendous preparations that have been made to enable visitors to view the Olympic Games this year, it is already clear from the advance bookings that have been made that the crowds will be so enormous that it will be absolutely impossible to accommodate everybody in the stadium. A large number of television looking-in theatres is, therefore, to be established in Berlin, and the Games are to be relayed to these, sound as well as vision being, of course, included. It is highly probable that this televising of the Games will lead to many of the hotels establishing viewing rooms for their guests, and undoubtedly a large number of television receiving sets will be sold to the public. It is probably a little too much to hope that the same facilities will be provided in London next May for the benefit of the crowds of people who would naturally like to see the actual Coronation ceremony.

Station Names Confusion

A GREAT deal of confusion often arises concerning the identity of a broadcasting station owing to the habit of giving it various names indicating the situation of the transmitter as well as the studio. Often the transmitter is many miles from the studio, and although people in this country may realise that Brookmans Park and London are merely two names for the same station, foreigners may easily be confused. Similarly English listeners may be confused by the same sort of thing occurring in the case of foreign stations. Realising this state of affairs, the German authorities have now made it a definite rule to name a station after the place where its studio is situated. Thus, Heilsberg is now called Königsberg I, while Mühlacker is called Stuttgart, and so on.

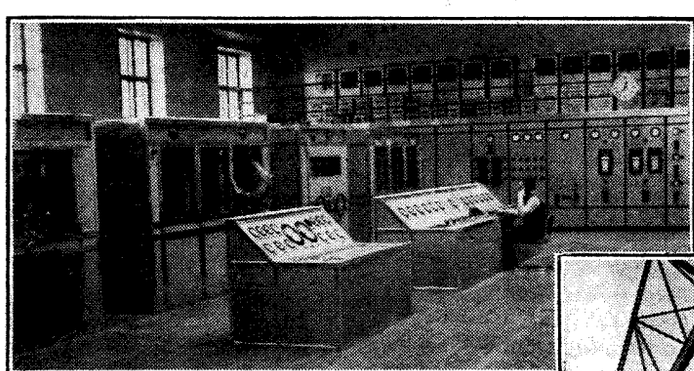

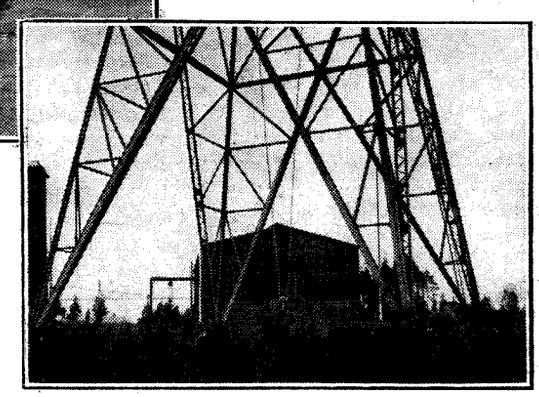

The well-known 1,807 - metre Lahti transmitter. Under the new German system of station naming it would be known as Helsinki.

Quartz Hunting in Rhodesia

THE demand for quartz crystals which wireless development has caused has added a new zest to the lives of prospectors in Southern Rhodesia. Hitherto these crystals have been of little value, but now that there is a market for them they are being avidly sought. They can be detected by the fact that they cannot be scratched by a knife. However, although all quartz crystals possess the property of unscratchability, all unscratchable crystals are not quartz, some of them being a far more valuable substance, namely, topaz.

New Ultra-short Wavelength Possibilities

RECENTLY the first public demonstration was given of the new ultra-short-wave circuit between New York and Philadelphia. Wavelengths of the order of 3 metres are used, and since they have scarcely more than optical range, two automatically operated repeater stations are used at a distance of approximately 30 miles apart to cover the total of 91 miles separating the two cities. Again, owing to the limited range of these ultra-short wavelengths, there is no interference with other services. Although such a circuit could, of course, be used to carry ordinary telegraphic traffic, this is not the object of the R.C.A., which is responsible for setting it up. The R.C.A., apart from developing the system for use as a television link, has its eye on the bulky mail bags of the postal service, for the possibility is envisaged of establishing a facsimile letter service by inducing business men and other people to have telegraphed facsimiles of their letters delivered to their correspondents in a few minutes instead of waiting a whole day for the originals to be delivered by mail.

Listeners' Guide for the

Outstanding Broadcasts at Home

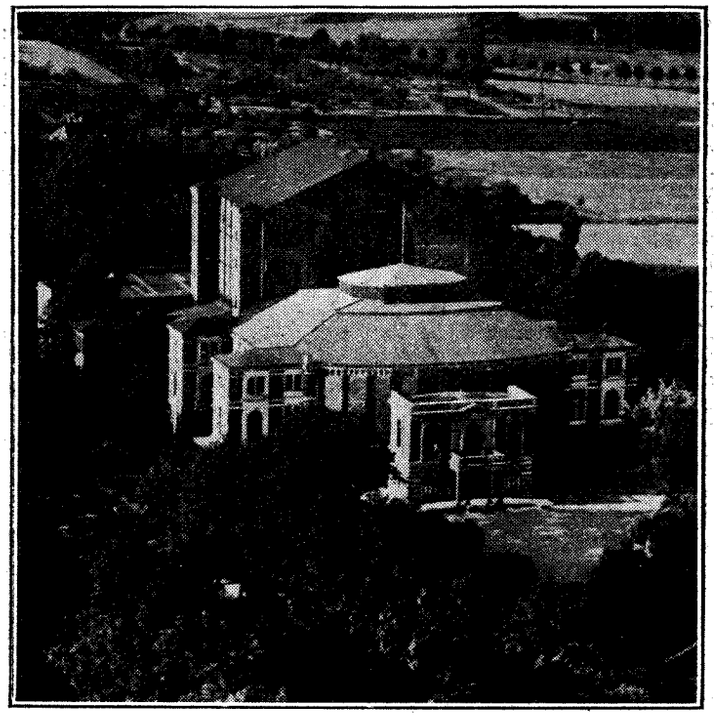

THE FESTSPIELHAUS, BAYREUTH, which was founded during Wagner's lifetime and now sets the mode and standard for Wagner productions. "Lohengrin" will be relayed from here by the National and Regional transmitters and most of the European stations on Sunday.

DURING the next seven days two outstanding continental musical festivals are included in the programmes. On Sunday two relays will be given from the Wagner Festival at Bayreuth, which will include the first and second acts of "Lohengrin." Act I will be relayed at 4 by the Regional transmitter and Act II at 5.50 Nationally. The orchestra, which is the best Wagnerian combination Germany can provide, will be conducted by Wilhelm Furtwängler, and the cast is to include Max Lorenz in the name part, Maria Müller as Elsa, Jaro Prohaska as Telramund, and Margarethe Klose as Ortrud.

The second occasion is on Tuesday, when the Vienna Philharmonic Orchestra, conducted by Bruno Walter, will be playing in the Festival Hall, Linz (Upper Austria), during the Bruckner Festival Concert. This will be relayed from 8 to 9.45 in the National programme.

OPERATIC MUSIC

TO-NIGHT (Friday) at 8 will be the first occasion on which the Sadler's Wells Orchestra has broadcast from the studio. Conducted by Warwick Braithwaite, they will be heard in a programme of operatic excerpts, including: Three Dances from Smetana's "The Bartered Bride"; a scene from Stanford's "The Travelling Companion"; a scene from Verdi's "Falstaff," and the Overture to "Tannhäuser."

CAMPING

THE Saturday evening Sports Talk this week will be devoted to camping, which was, until a few years ago, the pastime of a minority. It has now become the mode of holiday for an increasingly large number, many of whom have little or no knowledge of camp life. To such, and for that matter to old hands also, the talk by H. J. Lewis at 6.30 (Nat. and Reg.) on Saturday should be helpful and instructive.

TENNIS AND SHOOTING

TENNIS comes into the programmes again this week. The Inter-Zone Finals between Australia and Germany in the Davis Cup Competition will be the subject of running commentaries in the National programme from Court No. 1 at Wimbledon on Saturday at 3 and 4, and again on Monday at 3.30.

Captain E. H. Robinson, who is himself a crack shot, will comment, from Bisley Camp, on the final stage of the competition for the King's Prize on Saturday at 3.15 (Nat.). Captain Robinson, who is, by the way, also a well-informed wireless enthusiast, will hold even the uninitiated with his genial remarks.

TAUBER'S CAREER

MARK H. LUBBOCK has devised an interesting scena on which to form the programme when Richard Tauber, with the Theatre Orchestra, broadcasts on Sunday at 9.30 (Nat.). This will consist of five manifestations of Tauber during his career. There will be Tauber of Grand Opera; the Lieder Singer; in Operetta—which will include "You are My Heart's Delight"; as composer and as conductor. These last two will be illustrated by Tauber conducting the orchestra in his own works.

HIGHLAND GAMES

A FEW miles up Loch Lomond from Balloch is the beautiful village of Luss, where the big event of the year is the Highland Games. George Blake will give a commentary from the Games Park in the National programme at 3.30 on Wednesday. There will, of course, be pipe music, which is never heard to such fine advantage elsewhere.

"DINING OUT"

SYDNEY BAYNES and his Orchestra, who are taking over the work of the Variety Orchestra, the members of which are on holiday, appear to-night in a programme of light music entitled "Dining Out" at 9 (Nat.), with Helen Mackay and Leslie Mitchell.

JOHN KEATS

A PROGRAMME by E. V. Davenport and Dorothy Margaret Stuart based on the life, letters and poems of John Keats is to be broadcast on Sunday at 9 (Reg.). The title given to this programme, which is to be produced by Barbara Burnham, is "Wentworth Place." It was at Wentworth Place, near Hampstead Heath, that Keats first met Fanny Brawne, and where he spent the last distressful weeks preceding his departure for Italy. The play, which covers the period from October, 1818, to September, 1820, includes the occasion on which, when listening to the nightingale in the garden, he wrote that immortal poem, "Ode to a Nightingale." Ending with the last tragic days of the young poet's life, listeners will be left with the impression that, though the end was tragic, it did not come before the poet had delivered his message.

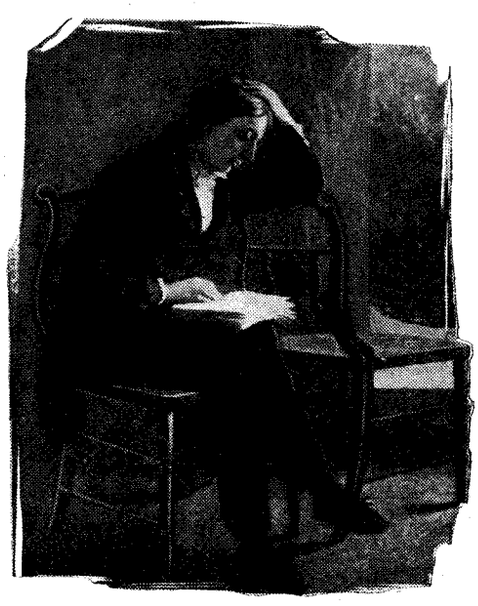

JOHN KEATS, from the painting by Joseph Severn. A feature programme on Sunday at 9 (Reg.) will deal with the life of this tragic young poet.

Week

d Abroad

"MR. BARLEY'S ABROAD"

THIS musical comedy, which has been written expressly for broadcasting and will be given its first performance at 8 on Monday (Nat.) and again on Wednesday at 8.50 (Reg.), is built around Mr. Barley's habit, whenever the telephone bell rings, of instructing his secretary to say: "Mr. Barley's Abroad." The composer, Geoffrey Henman, submitted the book of his proposed musical comedy to the B.B.C. some twelve months ago, it was jockeyed from office to office and eventually passed into the able hands of Tom Arnold, the author, and subsequently to Henrik Ege, who has adapted many musical stories for radio. Lyrics were then added by Christopher Hassell, and now Bryan Michie is to produce it with a cast strong in humour, including Claude Dampier, Phœbe Hodson, Bobbie Comber and Effie Atherton.

DEREK OLDHAM singing before the H.M.V. microphone. He will be heard with the Theatre Orchestra conducted by B. Walton O'Donnell in the Regional programme at 8.45 on Tuesday.

OPERA FROM ABROAD

WITH the Opéra closed until August 1st and the Opéra-Comique out of action until September 1st, opera transmissions from the French stations are much curtailed. On Saturday Milan gives selections from 8.45 to 11 from three of Rossini's operas, while Monte Ceneri gives forty-five minutes of Italian opera music from 9 o'clock. Most of the stations of Europe are taking the Bayreuth Festival performance of Wagner's "Lohengrin" on Sunday from 4 till 9.

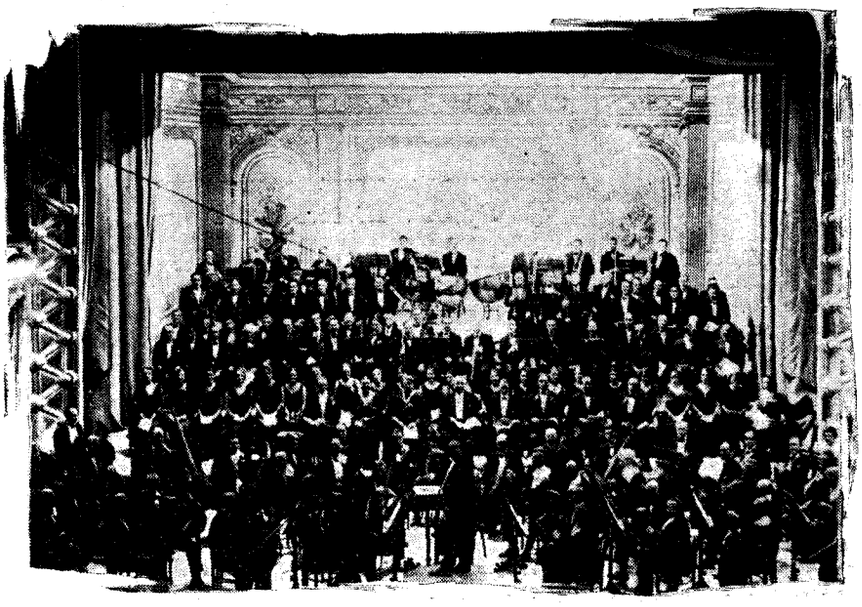

THE GRAND CASINO, Vichy. The orchestra and chorus, which are shown here, will be heard from Radio-Paris on Monday at 8.45.

CONCERTS AND RECITALS

THE absence of opera is partly filled by a fine choice of concerts. At 9.30 to-night (Friday) all German stations will take a sort of foretaste of "Lohengrin" from the Bayreuth Festival House, preceded by talks by the present "Meisterin" of Bayreuth, the Master's daughter-in-law and Siegfried's widow, Frau Winifred Wagner, the conductor Furtwängler and other Bayreuth officials. On Monday Radio-Paris takes the Vichy Casino concert at 8.45, with works of Wagner, Liszt, Hahn and Roussel. The Poulet Concert Orchestra gives an exclusively French programme on Tuesday at 5.30 on Radio-Paris; at the same hour on Wednesday there is a classical programme, also from Radio-Paris, by the Paris Symphony Orchestra, while on Thursday Lille gives a very fine Schumann concert for the eightieth anniversary of the composer's death.

SWEDISH GUEST HOUR

ON returning from a recent trip to London, Sund Waldimir, of the Swedish broadcasting organisation, has been put in charge of a new department of light entertainment. He has borrowed many of the ideas of Henry Hall and Eric Maschwitz, the first of which will be a Guest Hour with the newly formed Swedish Radio-Dance Band from 10 to 11 to-night (Friday) from Motala.

DANISH FUN FAIR

FROM 8 until 10.45 to-night (Friday) Copenhagen will be eavesdropping on the biggest outdoor amusement park in the northern part of Denmark, known as Dyrehavsbakken. This park is the rendezvous of 7,000 fun-hunting Copenhageners on bright summer nights, and the broadcast should therefore convey something of the *joie de vivre*.

THE AUDITOR.

HIGHLIGHTS OF THE WEEK

FRIDAY, JULY 17th.

Nat., 8.15, "The Ghost Train." 10, The Last Stage of G. M. Boumphrey's "Down River" Talks.

Reg., 8, Sadler's Wells Orchestra. 9, Sydney Baynes and his Band. ¶The Alfredo Campoli Trio.

Abroad.

Vienna, 8.50, "Song Hits of 1932–1934": Revue (including records of Harry Roy's Band, Tauber and Jan Kiepura).

SATURDAY, JULY 18th.

Nat., 3 & 4, Davis Cup Relays. 3.15, Bisley Relay. 8.30, Variety. 11, Edna Thomas—Negro Spirituals.

Reg., 9.30, Dorothy Hogben's Singers and Players—London Music, Old and New. 10.30, Henry Hall's Hour.

Abroad.

Rome, 9.30, Symphony Concert from the Basilica di Massenzio.

SUNDAY, JULY 19th.

Nat., 5.50, Bayreuth Festival Relay. ¶Recital: André Asselin (violin) and Frank Laffitte (piano). 9.30, Richard Tauber and the Theatre Orchestra.

Reg., 4, Bayreuth Festival Relay. ¶B.B.C. Orchestra (C) and Frank Titterton (tenor). 9, "Wentworth Place"—John Keats' programme.

Abroad.

Most European Stations, 4–9, "Lohengrin" from the Bayreuth Festival.

MONDAY, JULY 20th.

Nat., 7.40, Commentaries on Racing Pigeons at the Alexandra Palace and Doughty Street, London. 8, "Mr. Barley's Abroad."

Monday, July 20th (*continued*).

Reg., 8, Buxton Spa Orchestra. ¶Sydney Howard. ¶The Alfredo Campoli Trio—Contrasts.

Abroad.

Vienna, 8, Bruckner's Eighth Symphony from the Festhalle, Linz.

TUESDAY, JULY 21st.

Nat., 7.25, "Crazy People"; Concert Party from the Winter Gardens, Margate. 8, Bruckner Festival Concert relay from Linz. ¶An Hour of French Music: The Leslie Bridgewater Harp Quintet and Olive Dyer (soprano).

Reg., 8.30. An Interchange on Impressions between South Africa and England. I—England, by a South African. ¶Derek Oldham

Abroad.

Deutschlandsender, 9, Richard Strauss Concert.

WEDNESDAY, JULY 22nd.

Nat., 8, Harry Hopeful's Day in the Durham Dales—Alston to Barnard Castle. ¶"Sing a Song of Sixpence," how to write a popular hit, expounded by Rex London.

Reg., 8.50, "Mr. Barley's Abroad." ¶Recital: Edwin Benbow (piano).

Abroad.

All German Stations, 7, "Voices of the Peoples." Gala Concert of Folk Songs with Commentaries.

THURSDAY, JULY 23rd.

Nat., 8, "Romance in Rhythm," Geraldo and his Orchestra. ¶The Maurice Cole Trio.

Reg., 8, "Good-bye, Mr. Chips," Radio Play based on the novel by James Hilton. ¶The Leslie Bridgewater Harp Quintet.

Abroad.

Kalundborg, 10.30, Classical Ballet, Opera and Operetta Music.

HOME RECORDING

Unlimited Applications to Entertainment, Education and Business

By AN ENTHUSIAST

WHEN I offered to submit an article on home recording to *The Wireless World*, and my offer was accepted, I was more than surprised, as I claimed no knowledge of matters technical. I understand Leonard Henry, but Micro Henry and I are complete strangers. I am a firm believer in and have a deep appreciation of law in the home, but Ohm's Law leaves me bewildered. From this you will gather that the writer is "one of the crowd," blissfully ignorant of all that a *Wireless World* reader should know, and therefore the ideal person to test the possibilities and "foolproofness" of amateur home-recording apparatus.

Recent correspondence in *The Wireless World* indicates that there is far more interest in home recording than one would imagine. Those who experimented a few years ago with the apparatus then available to the public probably decided that they could get far better value for their money if spent in another direction. That was in the days when for the amateur only small aluminium discs were available. We can all remember the results when a soprano sounded like a baritone, and a baritone like a *basso-profundo*.

To-day there is a very different story to tell. Research workers have been busy designing home-recording apparatus and experimenting with coated discs, which will now give quality far beyond the hopes of the most ardent enthusiast of a few years ago.

The question of cost is always an important factor, but to-day one can obtain tracking devices with cutting head and blanks at prices which we had not previously dreamed possible, and the quality of reproduction is excellent. Engineers have evolved apparatus which can be used by members of the public with no previous experience of recording, and yet can make records of a quality which will cause them to marvel at their own cleverness, which is really a feather in the cap of those manufacturers who can put out such reliable gear.

With the average receiver giving about two watts output, a single-stage pre-amplifier is necessary to obtain satisfactory results of speech and music on microphone recordings.

Now what are the uses of home recording?

To hear ourselves as others hear us might prove a shock to our vanity, but, nevertheless, it is a fact that a vocalist, be he professional or amateur, is at a great disadvantage in being unable to hear his voice at the other end of the hall or room. Here, then, is one aspect of the value of home recording. It is an excellent test for the clarity of one's diction. It enables a singer to check up on the quality of his rendering; to watch carefully for points with regard to final consonants, and that most fatal of all things, swallowing the last half of the word. The same remarks apply to those whose interests, professional or otherwise, lie in elocution. I am sure if many of our present-day artists listened carefully to a record of their spoken parts they would realise how far from perfect they are. There are thousands of home cinema projectors in use to-day, and a holiday film can be made wonderfully interesting by judiciously worded records describing incidents which have taken place. It is a simple matter to time the remarks to suit the picture, and by writing these out in advance and checking up once or twice during the running of the film, records can then be made which will add double interest to the home cinema entertainment.

Personal Greetings

There must be thousands of small dance bands throughout the country, and a most important feature with any combination of players is the question of balance. Large dance bands have the advantage of a deputy conductor, whereas in small bands of five or six instrumentalists such is not the case. Home recording is, therefore, a great asset to the leader of a small band, who, having the necessary apparatus, is able, for a shilling or two, to criticise every point and counterpoint, and weigh up the performance as the audience will hear it.

The usual form of greeting is conveyed by means of card, wire or telephone. How much more interesting is it for our friends to receive a personal greeting by means of a gramophone record. So much more can be conveyed by the human voice.

At a recent dinner, after a number of telegrams from absent friends had been read, a great deal of amusement and appreciation was shown by the diners when the final expression of regret was played on a gramophone record made by an absent member, and his quips and jokes were applauded as much as those made by speakers who were present.

An aspect which probably few have considered is the value of communicating important business reports by means of the home-made record. It frequently happens that the written word does not convey the impression which the writer intends, but records of important reports can be played over to a board of directors and stored for future reference. This is already an established feature of some businesses.

When one realises that the ordinary domestic four-valve superhet receiver gives sufficient output to record broadcast items through one of these inexpensive tracking devices, it becomes obvious how valuable a home-made record can be. It should be made clear, however, that records of any matter broadcast may not be played in public or sold, but used solely for one's own entertainment. Take as an example the interesting weekly talks on languages. Records of these should prove invaluable to students of foreign languages, and the numerous talks which are given on subjects in which the listener has a particular interest are well worth recording.

So to those who have experimented in the past and given up home recording in despair of ever achieving really good results, I would say try again. If you have toyed with the idea and put it aside as being beyond your powers, then you would be well advised to make up your mind to invest in an inexpensive but reliable outfit. It will give you endless entertainment of absorbing interest, and will enable you to make a permanent record of the voices of many friends which in later years will recall happy memories and prove far more valuable than the old family album of the Victorian era.

RANDOM RADIATIONS

By "DIALLIST"

Tuning Dials

BEFORE now I have had something to say about the inadequacy of tuning dials, as fitted to many commercial receiving sets, from the long-distance man's point of view. I have expressed a particular loathing for the small station-name dial which shows but a selection of the European stations, and too often requires you to set the pointer at the name of one station in order to be able to receive another. Ferranti's have now written to bring their new "magnascopic" dial to my notice, and from what I have seen of it it must be a big step in the right direction. The main dial contains the names of twenty-seven medium-wave and nine long-wave stations. It has also metre calibration scales from 19 to 60, 200 to 550 and 900 to 2,000 metres. In addition, there is a degree scale behind a lens whose magnification is such that the effective length of the scale is stated to be over six feet. One or two makers have realised that there is a demand for the dial which enables accurate readings to be taken, and I am glad to see that Ferranti's have catered so well for the long-suffering long-distance man.

The "Proms"

THE B.B.C. recent announcement that relays of the "Proms" are to be cut to one hour in broadcast programmes is going to cause a great many protests and not a little hard feeling on the part of the very large number of listeners who hold that they have the right to hear good music delivered by the best of orchestras and soloists when it is available. It's rather queer, when you come to think of it, that proms and other big concerts should be run by the B.B.C. out of the listeners' money and that the listeners who have found the money should be given only scraps and snippets of them! After all, we have two sets of wavelengths. Surely, therefore, it isn't unreasonable for those who like the more serious kind of music to ask that one of them should be devoted to it for more than just an hour at a time. There are many important works which cannot be performed fully in an hour, so that if the recent decision is adhered to listeners will presumably be deprived entirely of the opportunity of hearing these—for it is of no use to broadcast an item that cannot be finished in the time allotted to it. The contention that people can't listen to good

music for more than an hour on end is ridiculous. Were it true, Queen's Hall, Albert Hall and Covent Garden audiences would be pretty thin.

Unsound Programme Policy

The whole trouble, I believe, arises from the endeavour of those who build programmes to try to make those on either set of wavelengths all things to all men. Never since the Regional scheme with its twin stations came into force have I been able to see the wisdom of trying to combine in one evening's programme such a weird mixture as, say, grand opera, variety of the most "popular" kind, a violin recital by a master, and dance music. This kind of thing was all very well when only one lot of wavelengths was available; but matters are very different now. Surely it would be much better to make the Regional programmes low-brow throughout and to devise National programmes for the middle-brow and the high-brow. One would then know just what to expect when tuning in either Regional or National, and there would be much more continuity about the programmes than there is at present.

How Do These Things Happen ?

THE other evening I was using a battery set in my own room and kept it going until bedtime. During the whole evening it functioned perfectly without the slightest symptom of a loose connection or anything of the kind. Next morning I switched on and found the set completely dead. On taking a look inside I discovered that the spade connector of the positive low-tension lead had become entirely detached from the terminal of the accumulator. Now, I had screwed that terminal well down when putting in the battery on the previous day; nobody had been near the set—or even into the room where it was installed—between my switching off in the evening and my switching on again the following morning. Nor had the set been subjected to any excessive vibration. What I want to know is how that terminal unscrewed itself sufficiently to allow the spade to come right away from it! This is by no means the first time that things of this kind have happened to me with wireless sets of all sorts, and I have no doubt that many readers have had similar mystifying experiences. They certainly are a puzzle.

["Diallist" lives on a main road. Probably he slept through the earthquake of the passage by night of a travelling circus.—ED.]

The Television Bogy

FOR some reason best known to itself the wireless trade has for a long time been very apprehensive of the possible evil results to its business of giving prominence to television. That this nervousness is unwarranted readers of *The Wireless World* will know well enough, since it must be years before the television receiver can be a serious menace to the wireless set as we know it to-day. Much the same attitude was shown by French radio manufacurers, who at one time tried to make the French Government confine its television transmissions to brief periods, and were all against any kind of "boosting" of television at exhibitions and shows. They have now undergone a surprising change of heart; so much so that they are requesting the Government to increase the number and the length of its television programmes. In other words, they have come to realise that television is a thing to be cherished rather than fought, since it offers a profitable field for their activities, not in opposition to "sound" wireless but side by side with it. Let's hope that our people will also see the light.

Broadcasting the Road Hog

IN America the traffic authorities have found a novel means of using broadcasting to help them to reduce the toll of the roads. In one large town the experiment was tried of taking the microphone into the local police court for half an hour each morning when offenders against the traffic regulations were being tried. The name of the culprit was, of course, broadcast, together with the evidence and the scathing remarks from the Bench if he was convicted. The results obtained were so excellent that the time of the broadcasts is being doubled, and since they have brought about a big reduction of traffic accidents it seems likely that the scheme will be extended to other cities. 'Twould be no bad thing could something of the kind be done in this country. I can think of quite a few road-hogs to whose trials I would listen with the greatest joy!

In Next Week's Issue

Ultra-Short-Wave Converter

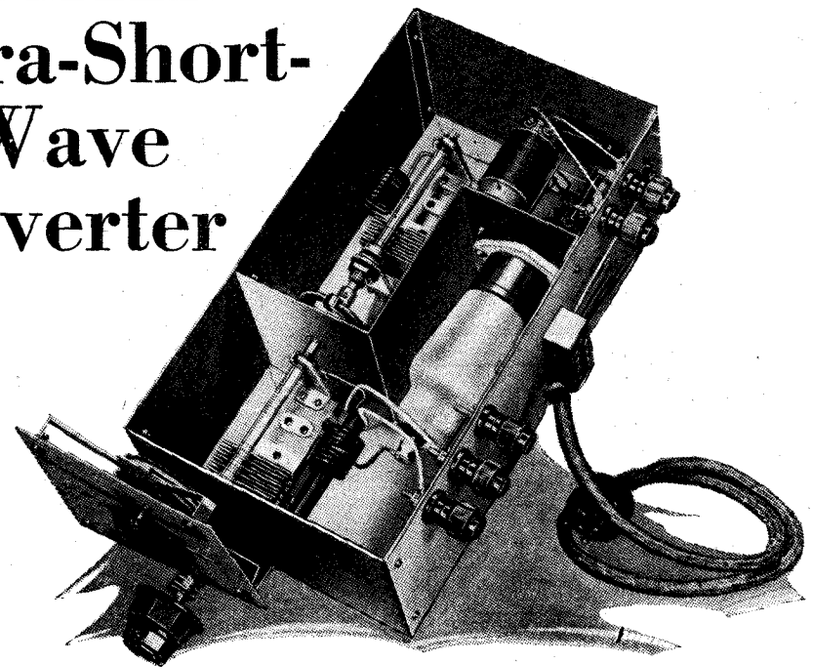

Reception on the 6-9-Metre Band with Ordinary Sets

THE simplest method of receiving ultra-short-wave signals is undoubtedly by adding a suitable converter to the ordinary broadcast receiver, and when the apparatus is properly arranged very good results can be obtained. A single valve is used in the new converter and it functions as a frequency-changer, having a tuned oscillator circuit and one tuned signal-frequency circuit. A two-gang condenser is employed so that there is only a single tuning control.

A range of rather more than 6-9 metres is covered, and this includes the wavelengths of the new Alexandra Palace station. Although the vision signals can be received, the equipment is not, of course, suitable for picture reception, since the receiver with which it is used will not pass a wide enough band of frequencies. It is in the reception of the sound accompaniment that the converter will find its greatest application, and also for the reception of transmissions on the amateur wavebands.

LIST OF PARTS

2 Single condensers, 30 mmfds., with extended spindles for ganging — **Polar Type "E Special"**
1 Slow-motion condenser drive — **B.T.S. Type TRA/WW**
1 Flexible coupler — **Eddystone 1009**
1 Plug top connector — **Belling-Lee 1175**
1 Valve holder, 7-pin (without terminals) **Clix Short-Wave Chassis Mounting Type V6**
Fixed condensers:—
2 0.01 mfd. — **T.C.C. "M"**
3 0.0005 mfd. — **T.C.C. "M"**
1 0.0001 mfd. — **T.C.C. "M"**
Resistances:—
1 200 ohms, ½ watt — **Erie**
1 1,000 ohms, ½ watt — **Erie**
1 50,000 ohms, ½ watt — **Erie**
1 75,000 ohms, ½ watt — **Erie**
1 20,000 ohms, 1 watt — **Erie**
1 30,000 ohms, 2 watts — **Erie**
1 HF output transformer — **Scientific Supply Stores**
1 Aerial coil (See text)
2 Coils (See text)
1 5-way cable with twin 70/36 leads and 5-pin plug — **Goltone**
5 Ebonite shrouded terminals aerial (2) earth; output (2) — **Belling-Lee "B"**
1 5-way connector — **Bryce**
1 Stand-off insulator — **Eddystone 1019**
Container, aluminium, 10½×5½×4in.—with four mounting legs for condenser — **B.T.S.**
Screen, aluminium, 10×4½in. — **B.T.S.**
Bracket for dial — **B.T.S.**
Miscellaneous:— **Scientific Supply Stores**
Small quantity No. 14 enamelled wire, No. 16 tinned copper wire and No. 24 D.S.C. wire; 1 length systoflex. Screws: 27 6BA ¼in. r/hd.; 2 4BA ¾in. r/hd.; all with nuts and washers.
Valve, 1 X41 metallised — **Osram or Marconi**

High-pass and Low-pass Filters

V.—Conclusion: Some Practical Difficulties and a Design

THIS, the concluding instalment of a series of articles in which simplified rules for the design of filters are laid down, deals with some of the problems (generally brought about by difficulties in connection with terminating loads) encountered in the practical application of filters.

By A. L. M. SOWERBY, M.Sc.

IN earlier articles some mild stress has been laid on the need for terminating a filter at both ends with a resistive load of the correct value, and it has been remarked that the penalty for using the wrong value of resistance is un-sharp cut-off combined with a certain attenuation even in the band of frequencies nominally passed by the filter.

Cases sometimes occur where there are difficulties in the way of correct termination. For example, in the circuit of Fig. 17 we have a triode valve V_1 used as resistance-coupled LF amplifier preceding an output triode. This latter valve will probably require, to drive it fully, a voltage-swing of something like 30 volts at its grid, and this may in some cases be very little less than the maximum voltage that V_1 can deliver without distortion. To obtain this maximum signal it is necessary to make the anode resistance R several times larger than the AC resistance R_o of the valve V_1; in an average case, where R_o may be about 15,000 ohms, R may have to be about 50,000 ohms. A higher value, though increasing the stage-gain a little, would reduce the permissible voltage swing at the anode of V_1 by reducing the mean anode voltage. A lower value, on the other hand, would reduce the gain of the stage, so making it necessary, if the large output required to drive V_2 is to be maintained, to increase the signal at the grid of V_1, and so, possibly, to cause distortion by running this valve off the straight part of its characteristic. Yet, as we have seen, we should like to reduce R until it is about equal to R_o, so as to be able to fit a filter correctly between the two. What are we to do about it?

First, it is evident that if R is made equal to R_o, the stage-gain will be equal to half the amplification factor μ of the valve. If $\mu = 36$, the gain will be 18 times. Supposing that V_2 requires 36 volts peak to drive it, V_1 will have to accept $36/18 = 2$ volts peak if it is to fill up the output valve. Inspection of the characteristic curves of V_1 will show, in any particular case, whether the valve will accept this input without distortion. If it will, all is plain sailing—we make $R = R_o$, and insert our filter according to the rules.

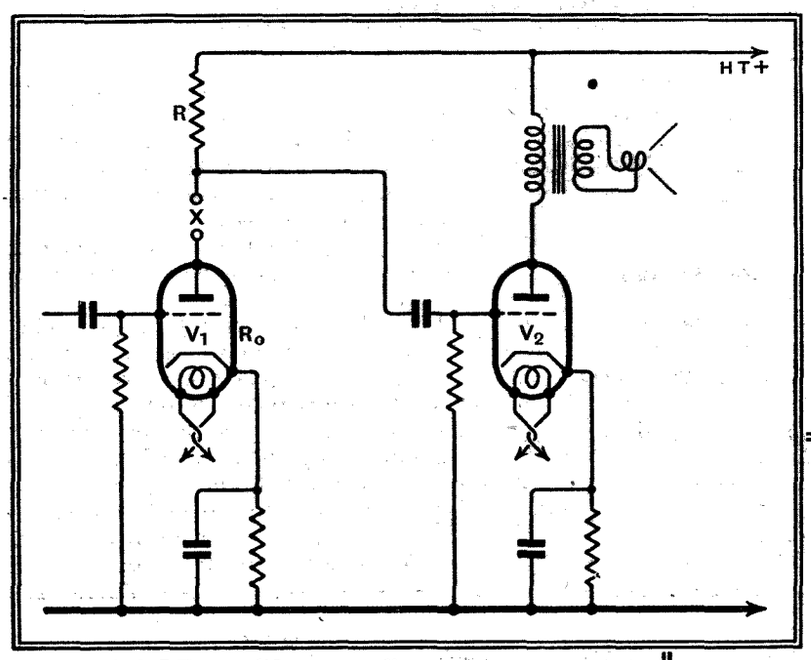

Fig. 17.—A case where filter-matching may be difficult. If V_2 requires a large signal, V_1 may overload if R is reduced to equal R_0.

Suppose, however, that V_1 will not accept the necessary signal without distortion. The simplest and best way out is to convert the circuit of Fig. 17 into that of Fig. 18, making R equal to R_o and inserting a transformer of step-up sufficient to permit the reduction of the signal-voltage at the grid of V_1 to a safe value. (Gain of stage now $\frac{1}{2}\mu n$, where n = step-up of transformer.) The impedance of the transformer primary, virtually in parallel with R, is so high in comparison with R that it plays no part in determining the characteristics of the filter that we can now safely insert at X.

Transformers, however, are not always desirable, if only because they have an annoying trick of picking up hum from the stray field of the mains transformer used to drive the set. So we may have to fall back on the other alternative, of keeping R unchanged, dropping our filter in at X, and hoping that the mis-matching at one or both ends of the filter will not upset its characteristics too drastically.

Reference to Figs. 19 and 20 will show the additional attenuation produced in different parts of the pass region of a filter by losses at the junction between an m-terminated filter ($m = 0.6$) and a resistance. Curves 1 refer in each case to a terminat-

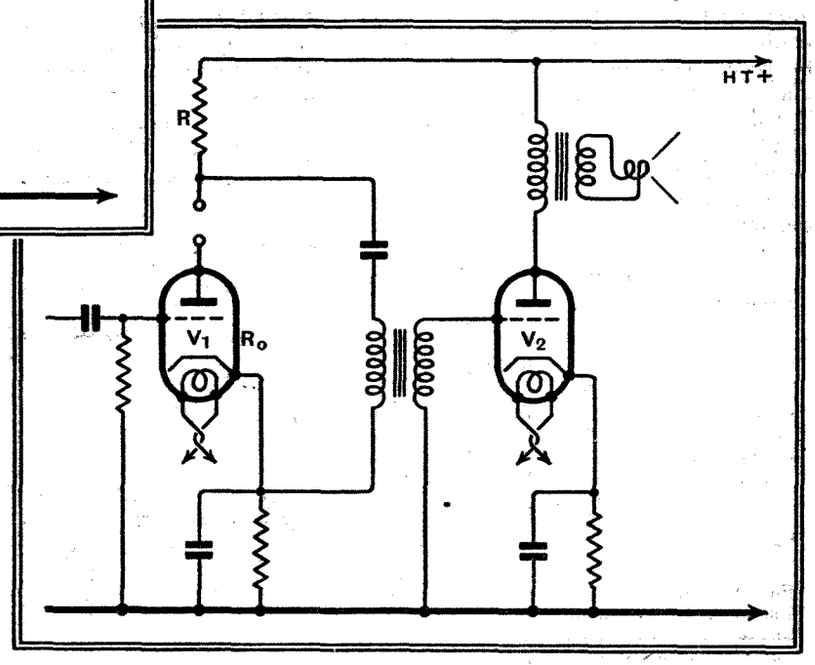

Fig. 18.—By introducing a transformer and so raising the gain of the stage, R may in all reasonable cases be made equal to R_0 without distortion. Alternatively, V_2 of Fig. 17 may be replaced by a pentode or a triode of higher slope.

High-pass and Low-pass Filters—

ing resistance R_t equal to that (R) for which the filter is calculated; curves 2 give terminal losses for the cases where the filter is mis-matched by making R_t equal to half or double R. Worse mis-matching is covered by curves 3 and 4 as indicated in the figures themselves.

It will be noticed that the main effect of mis-matching is to introduce a roughly constant attenuation over the whole band of frequencies that the filter is nominally supposed to pass without hindrance. In addition, some irregularity occurs as the cut-off frequency is approached. For most wireless purposes these effects are too small to be serious. It should be noticed that the attenuation introduced by a mis-match in the ratio of 4 to 1 is more than twice that introduced by a mis-match in the ratio of 2 to 1. In designing a filter for Fig. 17, with terminating resistances of 15,000 and 50,000 ohms respectively, the filter should therefore be designed for neither of these values, but for an average between them, thereby dividing the mis-matching between the two ends.[1]

The same problem of mis-matching occurs, in a rather more difficult form, when it is desired to insert a filter between the output valve and the loud speaker, for maximum undistorted output can only be obtained when the loud speaker has an impedance considerably removed from that of the valve. (Higher in the case of triodes, and lower in the case of pentodes.)

Let us suppose we are faced with the following problem. Our output stage consists of two 4XP valves in parallel, combined impedance 450 ohms. We have a moving coil speaker suited to these valves (impedance 1,500 ohms) and a "tweeter" of the same impedance. We wish to pass the low notes to the former speaker and the high notes to the latter, making the division at 2,500 cycles. We shall use, therefore, one or other of the circuits shown in Fig. 8.

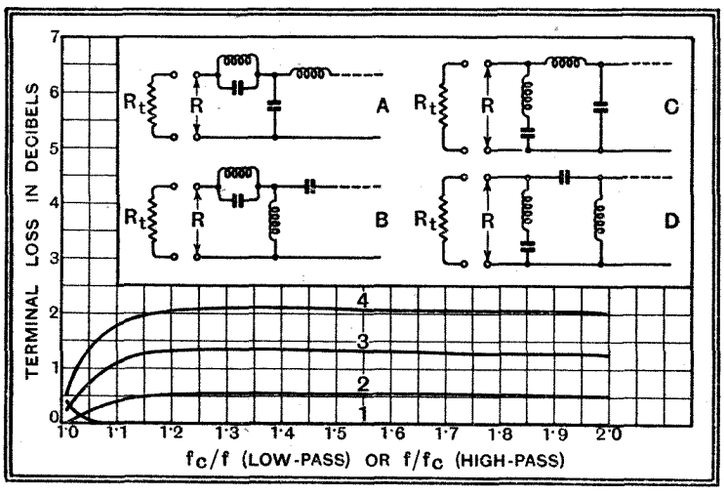

Fig. 19.—Terminal losses at m-termination when $m = 0.6$. Filters A and B (T-terminated m-derived) losses for $R_t = R$, $\frac{1}{2}$ R, $\frac{1}{3}$ R, and $\frac{1}{4}$ R. Filters C and D (π-terminated, m-derived) losses for $R_t = R$, 2R, 3R, and 4R.

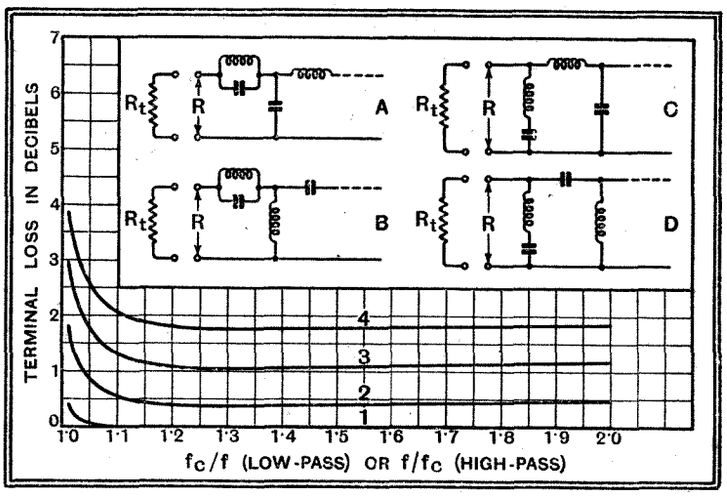

Fig. 20.—Terminal losses at m-termination when $m = 0.6$. Filters A and B (T-terminated m-derived) losses for $R_t = R$, 2R, 3R and 4R. Filters C and D (π-terminated m-derived) losses for $R_t = R$, $\frac{1}{2}$ R, $\frac{1}{3}$ R, and $\frac{1}{4}$ R.

A Suitable Design

If we make each filter from $1\frac{1}{2}$ cells prototype and $\frac{1}{2}$ cell m-derived, we shall get, as Fig. 11 shows, the following attenuations. At 3,120 cycles (low-pass) and 2,000 cycles (high-pass), 34 db.; at 3,750 and 1,667 cycles 34 db.; rising to 40 db. at 5,000 and 1,250 cycles. The m-terminations will come next the speakers; where the filters meet the modified prototype endings of Fig. 8 will be used. The filters will be designed for the compromise value of 800 ohms; this will lead to a loss of about 1 db. at all frequencies due to mis-matching.

It can be shown that if a prototype filter is to work into a resistance lower than its theoretical R, it should have a T-termination; this means that we shall connect the filters in parallel according to the circuit of Fig. 8*b*. (If the valves were pentodes, having a higher impedance than the speaker, and hence also than the filter, a π-termination would be preferable on the valve side, so that we should have to put the inputs of the filters in series, adopting the circuit of Fig. 8*a*.)

We arrive, therefore, at the circuit of Fig. 21, into which we now have to insert values.

For the low-pass filter, $f_c = 2{,}500$ cycles, $R = 800$ ohms, from which we find that $L = 102$ mH., $C = 0.159$ μF. We at once bring the capacity to the round figure of 0.15 μF., and increase the inductance in the same proportion to 108 mH. This keeps f_c unchanged, but raises R to about 850 ohms. Since the original value of 800 ohms was only a compromise anyway, this can do no harm. For the m-derived cell,

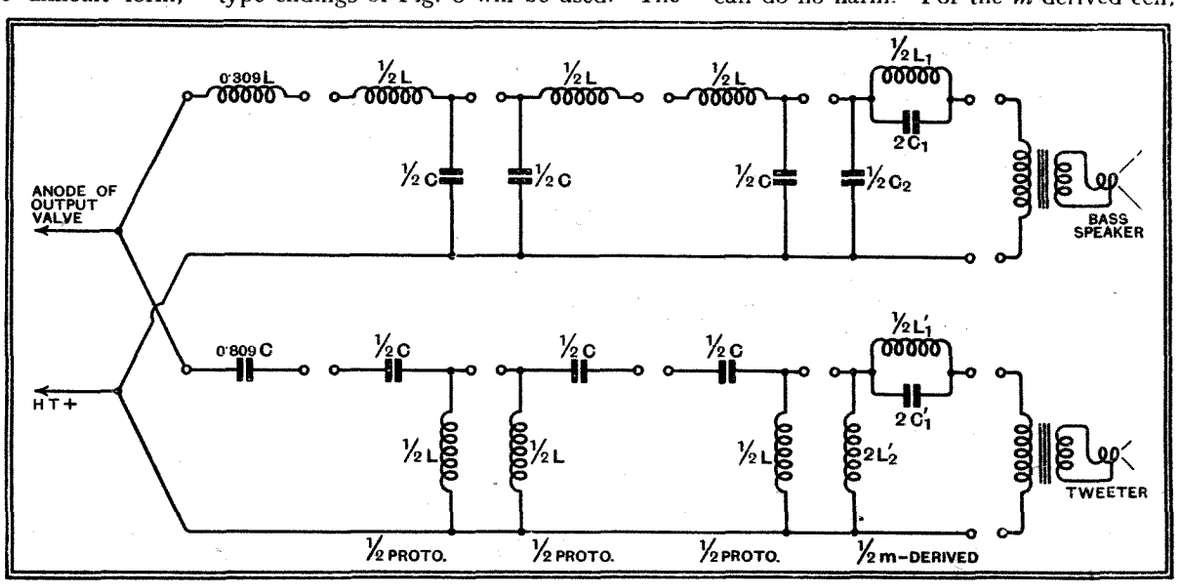

Fig. 21.—Circuit, in half-cell formation, of complementary filters in parallel. Each has $1\frac{1}{2}$ proto. cells, $\frac{1}{2}$ m-cell. Note that L and C refer in *both* filters to the low-pass values.

[1] Strictly speaking, the geometric mean should be taken and the filter designed for $\sqrt{15{,}000 \times 50{,}000} = 27{,}300$ ohms.

High-pass and Low-pass Filters—

taking $m=0.6$, we have $L_1=64.9$ mH., $C_1=0.04$ μF., $C_2=0.09$ μF.

For the complementary high-pass filter, the inductance and capacity each have one-quarter of the value just found for the low-pass filter. In the values of Figs. 8 and 21 this is allowed for, L and C standing in both figures for the low-pass values taken as a starting-point for the calculation. But in finding L_1', C_1', and L_2' for the m-derived high-pass cell (Table, Part III) we must take this into account; L_1' is 3.75 times L/4, not 3.75 times L. We find, then, that $L_1'=101$ mH., $L'_2=45.0$ mH., $C_1'=0.0626$ μF. The buffer impedance linking the filters, 0.309 L and 0.809 C, come out to 33.4 mH. and 0.121 μF. respectively.

This completes the design; amalgamating the half-cells in the usual way by combining adjacent impedances leads to the final circuit of Fig. 22, in which all numerical values are shown. It turns out that the careful adjustment of C to 0.15 μF. was rather wasted effort; that value, though fundamental, only appears as such once in the whole system. Evidently, the condensers actually used will have to be patchwork affairs, the required capacities being built up from two or more capacities in parallel in each case.

It will be noticed that the design of even so complicated a filter system as this is not difficult, or even tedious; the main thing is to keep a clear head, and *never* to write $\frac{1}{2}$L where 2L ought to appear. The use of the half-cell formation as a starting-point is an enormous help in preventing mistakes of this sort.

If the valves had been in push-pull instead of in parallel, the circuit would have been a little harder to arrange. The fact that the combined valve impedance would then be 1,800 ohms instead of 450 ohms is easily allowed for by multiplying all the inductances, and dividing all the capacities, of Fig. 22 by 4. If a 1:1 output transformer immediately follows the valves, no circuit changes other than the obvious ones involved by introducing the transformer will be called for. If, as is more usual, the bass speaker has a centre-tapped primary winding on its transformer, the circuit becomes that of Fig. 23. The values on this are obtained by raising the impedance of the filter four times as just described, and then moving half of each series-arm impedance into what was previously the earth-line in order to make the whole system symmetrical and to allow of bringing in the HT ("earth" for signals) at the centre-tap of the speaker transformer.

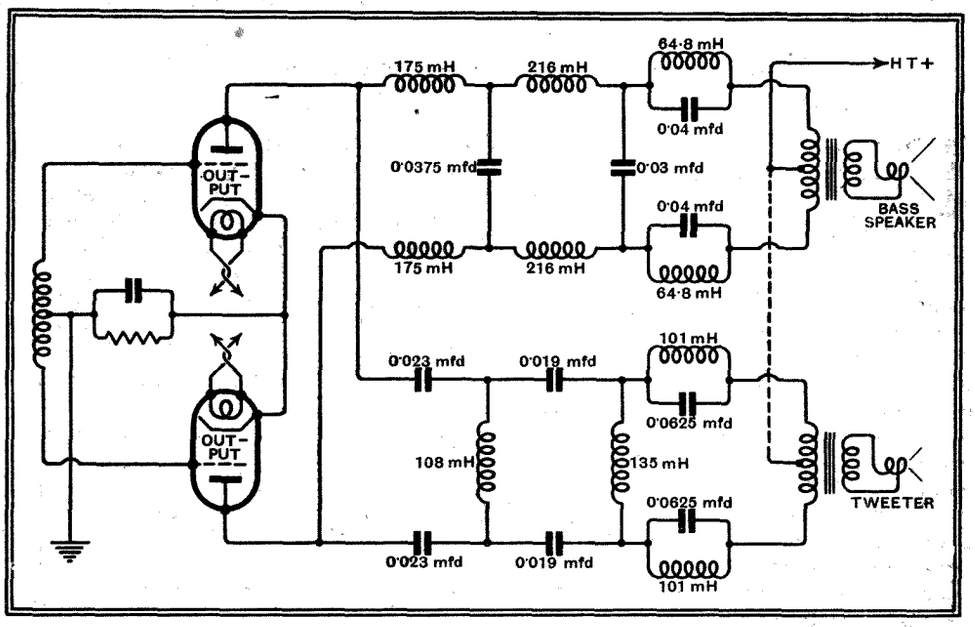

Fig. 23.—Circuit of Fig. 22 rearranged and increased four times in impedance, to suit the same valves in push-pull.

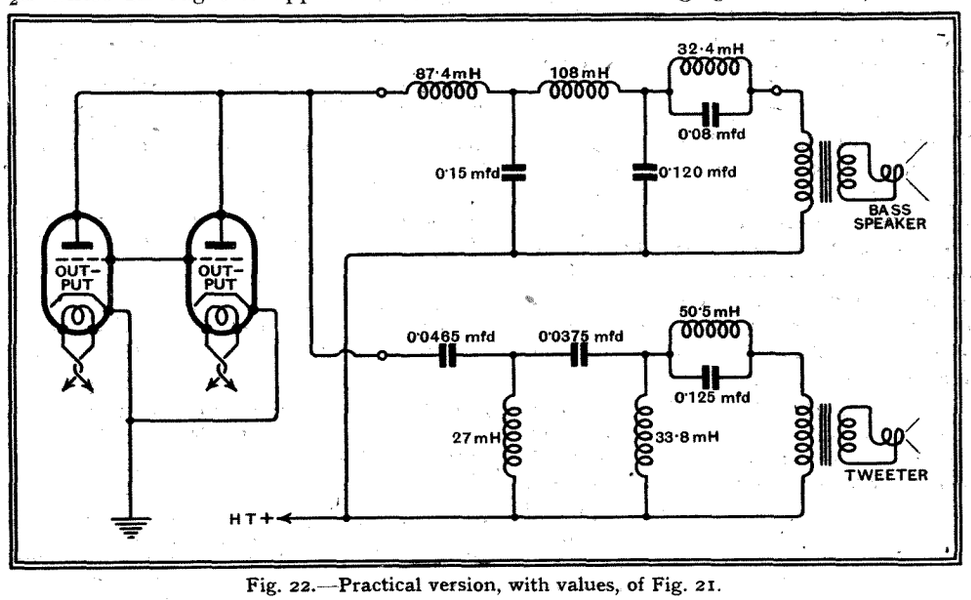

Fig. 22.—Practical version, with values, of Fig. 21.

One look at this diagram, and most people would go out and buy a push-pull output transformer to enable them to revert to the simpler circuit of Fig. 22.

It may have been remarked that no special pains have been taken to ensure that the two filters cut sharply at 2,500 cycles. In such a case as this there is no real need to worry overmuch about getting a sharp cut, for the mis-matching at the terminals will ensure that the bass speaker begins to drop in output below 2,500 cycles, and this loss will be made good by leakage to the tweeter of these frequencies, even though the high-pass filter, if theoretically perfect, would stop them.

It might perhaps give a closer approach to perfection if the filters were not made strictly complementary, putting the cut-off frequency of the low-pass filter at perhaps 2,300 cycles and that of the high-pass filter at 2,800 cycles. The frequencies between these limits, nominally stopped altogether, would leak through to both speakers. But it will be appreciated that the complexity of design is very considerably increased if the frequency-gap between the filters is brought in as still another variable quantity. For those interested, the necessary design data for non-complementary filters with series and parallel inputs is appended.

APPENDIX.—*Non-Complementary Filters.*

Find L and C for prototype low-pass and high-pass filters independently, giving each the value of f_c required. Divide the value of L found for the LP filter by that found for the HP filter; call the quotient a. Find x from the formula $x=\frac{1}{4}+\frac{1}{2}\sqrt{\frac{1}{4}+\frac{4}{a}}$ Proceed as follows:

A. Inputs in Series.
The circuit, but not the values, will be as shown in Fig. 8*a*. Each filter must terminate with a *total* shunt impedance which in the case of a low-pass filter is x times the fundamental C, and in the case of the high-pass filter is $\frac{1}{x}$ times the fundamental L found for the filter in question.

B. Inputs in Parallel.
The circuit, but not the values, will be as shown in Fig. 8*b*. Each filter must terminate with a *total* series impedance which in the case of a low-pass filter is x times the fundamental L, and in the case of the high-pass filter is $\frac{1}{x}$ times the fundamental C found for the filter in question.

The total impedance referred to comprises *both* the element of the last prototype half-cell and the "buffer impedance" added in series or parallel with it.

Still fuller information can be found in U.S. Patents Nos. 1557229 and 1557230, granted to Otto J. Zobel.

Protecting Cathode-Ray Tubes

EASILY APPLIED SAFETY MEASURES

By J. H. REYNER, B.Sc., A.M.I.E.E.

THE cathode-ray tube is such an expensive item that it is desirable to provide safety precautions against extensive damage. Apart from mechanical damage, the two principal sources of trouble are loss of emission and over-voltage on the electrodes.

Loss of emission will result from either under-running or over-running the cathode. The earlier forms of directly heated tubes have to be run at a specified filament current, and the use of a reliable ammeter here is important. If, due to inaccuracies, the tube is run consistently at, say, 1.1 amps instead of 1 amp it will very rapidly lose its emission. Under-running of the tube is almost equally disastrous, although there is some evidence in this case that something is wrong because a tube with an under-run filament will not give a sufficiently bright line on the screen. Consequently, if the filament current has to be increased over and above the rated value before satisfactory brilliance can be obtained, the meter should be suspected and checked.

Anode Circuit Protection

The indirectly heated tube overcomes this defect to a large extent, which accounts for the increase of popularity of this type, apart from other electrical advantages.

Excess voltage on the electrodes is a possible cause of damage, which is not always appreciated. The use of a fuse in the HT supply is not invariably helpful. The modern tube is constructed with a series of anodes at increasing positive potentials relative to the cathode. The first anode is at a potential of a few hundred volts only, and is very close to the cathode. The next one is farther away and at a potential of a thousand volts or so, while the third one is at the full potential of anything from 2,500 to 4,000 volts. The first two anodes may be replaced by a single anode running at 500-750 volts.

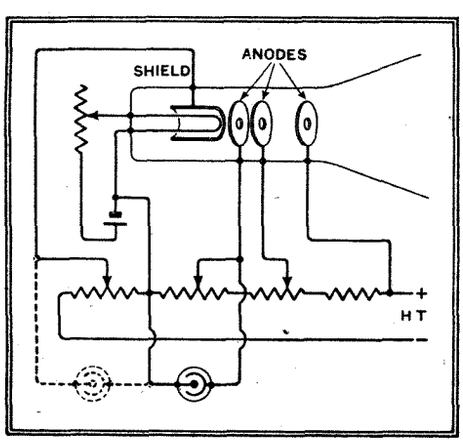

Fig. 1.—Connection of a neon lamp across the first anode. A similar lamp may also be used across the shield.

Now, if by any chance, due to a defect in the external circuit or even an internal flash-over in the tube, the full voltage finds its way on to the first anode the electrostatic stress set up will be probably from 50 to 100 times the normal value (it varies as the square of the voltage). It is more than likely that this will entirely wreck the filament or cathode and so destroy the tube. Such a tragedy happens in a fraction of a second and no ordinary fuse will protect it.

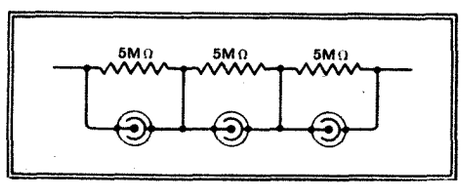

Fig. 2.—Method of using low-voltage neon lamps in series.

The use of a gold-film fuse may help—Microfuses are obtainable which blow at one milliamp only and are specially suitable for cathode-ray work—but an alternative and even surer precaution is to connect a neon lamp across the first anode and cathode, as shown in Fig. 1. If the striking voltage of this neon is adjusted to be a little above the normal working voltage of that particular anode, then if any excess voltage comes on this anode the neon lamp will strike and the relatively large current drain supplied through the high-resistance potentiometer network usually employed for feeding cathode-ray tubes will effectively limit the voltage and prevent any damage. Philips make neon lamps which strike at 500 volts instead of the usual 200, while Ionlite have produced a range of tubes striking at varying potentials to suit the different makes of cathode-ray tubes on the market.

Lamps in Series

Simple 200-volt neon lamps in series can be used provided they are connected across the potentiometer network as shown in Fig. 2. This arrangement equalises the voltage across each tube, and then the striking voltage across the whole network is n times the voltage across each lamp where n is the number of lamps. If the potentiometer arrangement is not used, then the voltage is divided in proportion to the leakages across the various lamps, and unless these happen to be approximately equal the greater part of the voltage will be developed across one lamp in the chain, which will therefore strike, and the striking voltage across the whole network will be little, if any, greater than that of one lamp alone.

As a further precaution a similar lamp may be connected across the shield, as shown dotted in Fig. 1. Alternatively, if the shield is connected to HT− and the cathode to the slider of the potentiometer an accidental voltage on the shield will merely short circuit the HT (which should be fused in any case) without damaging the tube.

The Radio Industry

THE new McMichael lightweight portable, which costs £8 18s. 6d., measures about 13 × 13 × 7½in. and weighs 22½ lb. The circuit is HF-det.-2LF.

An inductance bridge and a precision capacity bridge have now been added to the series produced by the instrument department of E. K. Cole, Ltd. Incidentally, Marconi's Wireless Telegraph Co., Ltd., and E. K. Cole., Ltd., have decided to form a jointly owned company to be called Marconi-Ekco Instruments, Ltd., with the main object of combining the activities of both companies in the fields of measuring instruments, diathermy and electro-medical apparatus. The address is Electra House, Victoria Embankment, London, W.C.2.

A new catalogue of Brimar valves has just been issued from the valve works of Standard Telephones and Cables, Ltd., Foots Cray, Sidcup, Kent.

"Noise and How it is Measured" is the title of an interesting pamphlet issued by Burgess Products Company, Barwell, Leicester.

Philips Industrial have installed exceptionally ambitious sound amplification equipment at both the London office and the King's Langley works of A. Wander, Ltd., the makers of Ovaltine.

In addition to specifications and full descriptions of the latest Ferranti sets, a new list (No. R.113) contains a description of the Magnascopic tuning dial and some useful hints for explorers on the short wavebands.

A new Osram rectifying valve, Type U18, gives a rectified output of 250 mA with 500+500 volts applied to the anodes, and is specially suitable for receivers employing an output valve of the PX25 type.

The June issue of the Bulgin Monthly Bulletin devotes a good deal of space to doublet aerials, and also announces the introduction of several new components.

Up to the present date the Electrical Industries Benevolent Association has distributed over £30,000 amongst nearly 400 deserving and necessitous persons. Regular weekly grants are being distributed to 63 beneficiaries.

Recent Inventions

The following abstracts are prepared, with the permission of the Controller of H.M. Stationery Office, from Specifications obtainable at the Patent Office, 25, Southampton Buildings, London, W.C.2, price 1/- each

Brief descriptions of the more interesting radio devices and improvements issued as patents will be included in this section

VALVE OSCILLATORS

IN general the frequency generated by a back-coupled valve varies as the reaction is increased or diminished, owing to the electrical constants of the circuits being simultaneously affected.

According to the invention this is avoided by using a variable-mu valve with a fixed coupling between the grid and plate circuits, as shown. A variable grid bias is applied from a potentiometer P through a high-frequency

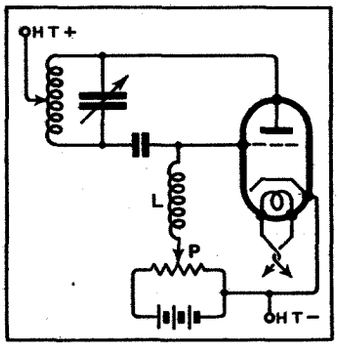

Valve generator in which the frequency is not affected by varying the amplitude of oscillation.

choke L. This permits the amplitude of the generated oscillations to be adjusted without any simultaneous alteration of frequency.

Marconi's Wireless Telegraph Co., Ltd.; G. M. Wright; and N. M. Rust. Application date August 30th, 1934. No. 444886.

o o o o

"BOTTLED" TELEVISION

A MOVING scene, or a cinema film, is scanned in the usual way, and the resulting currents after amplification are used to make a photographic "record" similar to the variable-width sound-track used in cinematography. The record is first made on a flexible film, which is afterwards converted into a stereotype or other suitable printing-plate. From this a copy is printed on paper in the form of a number of parallel columns.

In order to reproduce the pictures, the record is wrapped around a drum and is illuminated by a narrow beam of light of constant intensity. The reflected or diffused light falls on to a photo-electric cell, the output from which is fed to a standard television receiver. Synchronising signals may be separately recorded and used to operate a second photo-electric cell coupled to the time-base circuits of the receiver. The system may be used to reproduce pictures in natural colour.

E. W. C. Russell. Application date April 13th, 1935. No. 445068.

BROADCASTING AERIALS

IN order to radiate a field which is uniformly distributed in the horizontal plane, but which has a limited vertical spread, a series of aerials are arranged symmetrically, either in polygonal or circular formation, around a centre point, and are spaced apart from each other by half the working wavelength, or by a multiple of that distance. All the aerials are excited in phase.

O. Bohn (assignor to Telefunken Ges. fur drahtlose Telegraphie m.b.h.). No. 2029015. (U.S.A.)

o o o o

CATHODE-RAY "OSCILLATOR."

CURRENT is fed to a magnetic coil surrounding the length of a cathode-ray tube so as to produce a rotating field of relatively low frequency. The electron stream passing through this field is accordingly deflected so that it follows a closed two-dimensional path. It is then swept past a slotted electrode to produce "interrupted" pulses of high frequency. These are amplified by a method depending upon secondary emission, and fed to a transmitting aerial.

R. M. Heintz (assignor to Heintz and Kaufman). No. 2026892. (U.S.A.)

o o o o

AVC SYSTEMS

THE gain of a superhet set is regulated, as signal strength rises or falls, by using the mean anode current of the second detector to control the anode voltage of the local-oscillator valve.

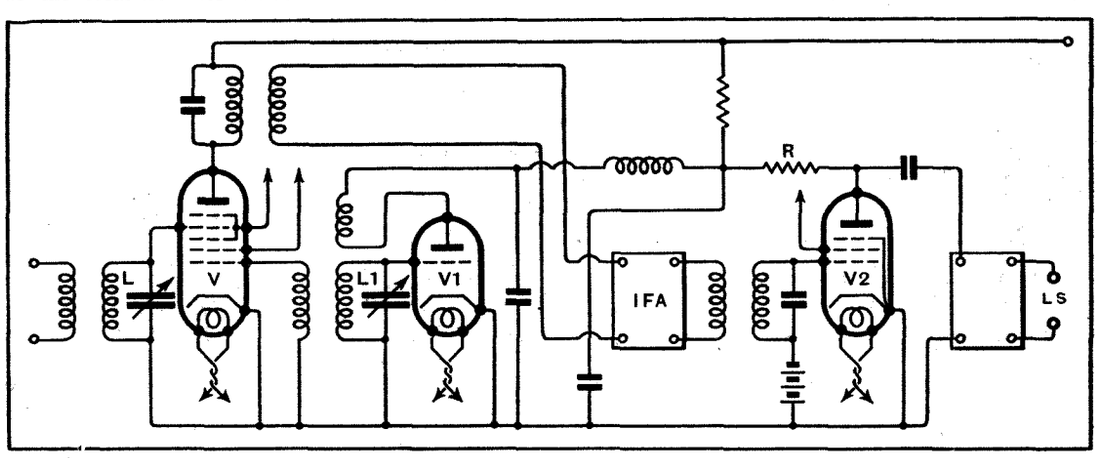

Arrangement of the AVC circuit described in Patent No. 444826.

As shown, the incoming signals are applied at L, together with local oscillations from the valve V1 at L1, to the mixer valve V, the output of which goes *via* the amplifier IFA to the second detector valve V2. Now the conversion "gain," or ratio of signal voltage to output voltage, of the mixer valve V is not constant but varies with the voltages supplied by the local oscillator valve V1. The latter are, in turn, dependent upon the voltage on the plate of the valve V1.

According to the invention, the plate voltage in question is supplied through a resistance R in the plate circuit of the detector V2, which is biased to the bottom bend of its curve. Accordingly a strong incoming signal will increase the mean anode current through V2, and so increase the voltage drop across R. This, in turn, will lower the voltage on the plate of V1 and so decrease the "gain" of the valve V, thus serving to keep the loud speaker volume constant.

British Tungsram Radio Works, Ltd., and J. A. Szabadi. Application date October 15th, 1934. No. 444826.

A RECEIVER is provided with two sources of AVC, one of which utilises voltages developed at a point in the receiver where the selectivity is comparatively low, i.e., near the output stage, and is used to control only the input stage. The other AVC line operates normally.

The idea is to prevent overloading of the input valve by strong signals from a nearby station.

Marconi's Wireless Telegraph Co., Ltd. (assignees of K. A. Chittick). Convention date (U.S.A.) September 30th, 1933. No. 445030.

o o o o

CATHODE-RAY TUBES.

IN a cathode-ray tube of the mosaic-cell or Iconoscope type, it is found that stray electrons and ions, as well as the X-rays created by their impact, affect the screen and give rise to disturbances which tend to distort the picture signals. It is also difficult to mount the mosaic-cell electrode so that it lies flat and free from vibration.

According to the invention these difficulties are overcome by mounting the photo-sensitive surface between two plates of mica or other material not affected by stray ions or electrons. One of the mica plates forms an insulator between the cell surface and its associated anode, whilst the other mica plate serves as a support for the sensitised surface and keeps it flat.

J. D. McGee and G. S. P. Freeman. Application date October 24th, 1934. No. 445485.

o o o o

REMOTE TUNING CONTROL.

REMOTE tuning can be effected by means of a step-by-step switch, similar to that of an automatic telephone. Such a switch is indicated at S in the Figure, and

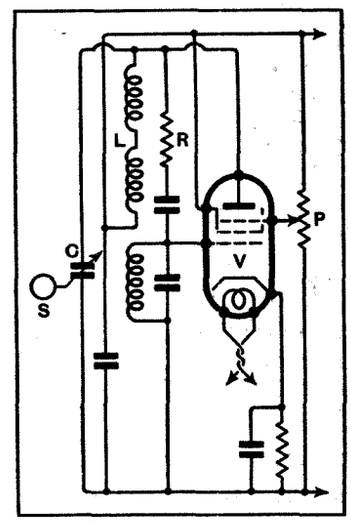

Remote control tuning circuit.

is connected so as to rotate the tuning condenser C. In addition, the local oscillator valve V (which may be a Mazda AC/SPI) is arranged through a leak resistance R to function as a "negative" capacity (or inductance) shunted across the tuned circuit LC. Its value in this role is varied by the bias applied to its outer grid through a tapping on a potentiometer P, which is also located at the remote point of control. Rough tuning is first effected by the switch S, and the set is then finally adjusted by moving the tapping point on the potentiometer until the local oscillations produce the correct beat frequency with the incoming signal.

E. K. Cole, Ltd., and A. W. Martin. Application date December 1st, 1934. No. 445496.

The Wireless World
THE PRACTICAL RADIO JOURNAL
26th Year of Publication

No. 882. FRIDAY, JULY 24TH, 1936. VOL. XXXIX. No. 4.

Proprietors : ILIFFE & SONS LTD.

Editor :
HUGH S. POCOCK.

Editorial,
Advertising and Publishing Offices :
DORSET HOUSE, STAMFORD STREET,
LONDON, S.E.1.

Telephone: Waterloo 3333 (50 lines).
Telegrams: "Ethaworld, Sedist, London."

COVENTRY : Hertford Street.
Telegrams: "Autocar, Coventry." Telephone: 5210 Coventry.

BIRMINGHAM :
Guildhall Buildings, Navigation Street, 2.
Telegrams: "Autopress, Birmingham." Telephone: 2971 Midland (4 lines).

MANCHESTER : 260, Deansgate, 3.
Telegrams: "Iliffe, Manchester." Telephone: Blackfriars 4412 (4 lines).

GLASGOW : 26B, Renfield Street, C.2.
Telegrams: "Iliffe, Glasgow." Telephone: Central 4857.

PUBLISHED WEEKLY. ENTERED AS SECOND CLASS MATTER AT NEW YORK, N.Y.

Subscription Rates :
Home, £1 1s. 8d. ; Canada, £1 1s. 8d. ; other countries, £1 3s. 10d. per annum.

As many of the circuits and apparatus described in these pages are covered by patents, readers are advised, before making use of them, to satisfy themselves that they would not be infringing patents.

CONTENTS

	Page
Editorial Comment	73
Ultra-Short-Wave Converter	74
Combating Radio Interference	77
The Home Laboratory—II	78
Loud Speaker Inter-communication	80
Current Topics	83
Murphy B23 Reviewed	84
The Listeners' Guide for the Week	86
Unbiased	88
New Apparatus Reviewed	89
On the Short Waves	90
Broadcast Brevities	91
Recent Inventions	92

EDITORIAL COMMENT

Electrical Interference

The I.E.E. Report

ON another page a summary is given of the Report just presented to the Council of the Institution of Electrical Engineers by the Committee on Electrical Interference with Broadcasting appointed by the Council in 1933.

Readers will recollect that it was following the suggestion made in 1932 by *The Wireless World* that the Institution was the proper authority to appoint a committee to investigate the subject that a "provisional Committee" was set up, which issued a report in April, 1933. The Council of the I.E.E. then appointed the "representative Committee" whose report has just appeared.

Although we have repeatedly been responsible for some hard criticisms of the slow progress which this Committee has made, and have at times expressed doubt as to its competence or willingness to make its work effective, we would now wish to be the first to express high appreciation of the result of the Committee's deliberations as expressed in the Report and to congratulate the Chairman, Mr. C. C. Paterson, and all the members on the effective work which has been done. Especially we would wish to express our approbation of the conclusion now finally arrived at by the Committee that legislation to enforce the regulations is essential to success.

From the outset we have held the view that no solution to the problem was possible without legislation.

As long ago as September, 1932, we were urging that legislation should be introduced and pointing out how it should be applied. "Legislation," we said, "is the only effective remedy . . ." "It should be made illegal to sell or install apparatus causing interference, after a certain date to be decided upon, and a second date could be arrived at on a reasonable basis after which all existing electrical apparatus had to be made free from interference or be dismantled."

At the time we suggested that the I.E.E. should investigate the matter with legislation in view our proposals received the support of leading journals of the electrical industry, and acknowledgment of the suggestion was received from the I.E.E.

At that time we recommended that the sale of apparatus liable to cause interference, whether of British or foreign manufacture, should be made illegal, and that the elimination of interference from existing apparatus in use should be effected gradually.

These recommendations, we are glad to find, are all included in the I.E.E. report, and we can now only hope that there will be the shortest possible delay in carrying out the proposals.

Cheaper Valves

Welcome Price Reduction

THE recent announcement by British manufacturers of substantial reductions in valve prices has come as very welcome news at a time when the need for such a step was becoming a matter of serious concern to the industry and the public.

The Wireless World has consistently urged the need for such a move in order to encourage the more generous use of valves in receiver design, and to overcome public prejudice against multi-valve sets which has grown up due to the high cost of valve renewals.

It is to be hoped that the larger sets will now return to favour and that minimum valve sets will be hurried to the obsolescent category where they belong.

Ultra-Short-Wave

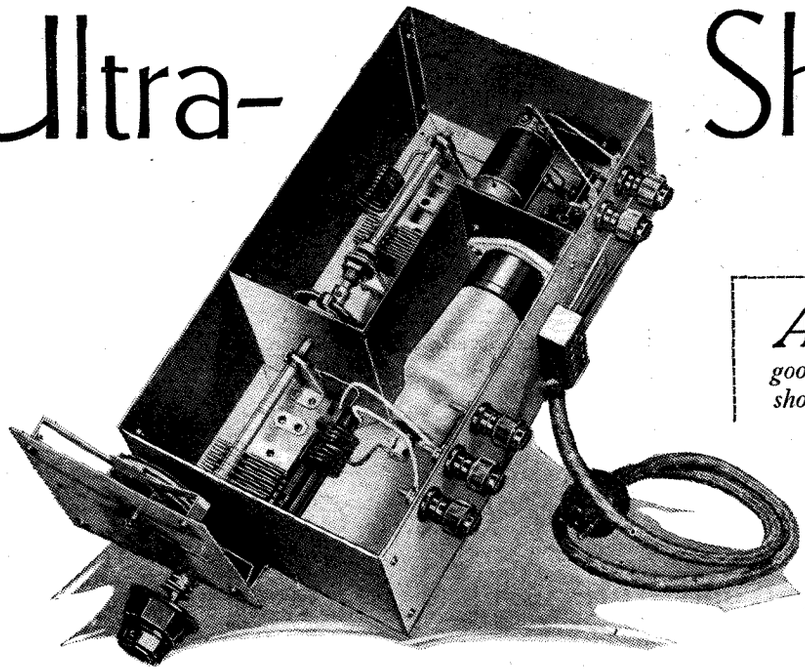

By W. T. COCKING

ALTHOUGH special receiving equipment is undoubtedly essential for television reception, good results can be obtained from other ultra-short-wave transmissions, including the sound accompaniment to television, by using the ordinary broadcast receiver in conjunction with a suitable converter. The apparatus described in this article is of simple nature and enables good reception to be secured over the 6-9-metre waveband

Seven-Metre Reception with an Ordinary Broadcast Receiver

THE commencement of broadcasting from the Alexandra Palace will undoubtedly greatly intensify the present interest in ultra-short-wave reception even among those who are not yet interested in television itself. The sound transmissions are to be on a frequency of 41.5 mc/s (7.23 metres) and the vision signals on 45 mc/s (6.66 metres), the power used being 3 kW for sound and 17 kW for vision. For television reception of the quality necessary for a good picture a special receiver will be needed, but this does not apply in the case of sound reception. It is possible to secure very good results from the sound transmissions by using any ordinary medium waveband set in conjunction with a converter.

In essentials, an ultra-short-wave converter differs in no way from a short-wave converter. In practice, however, much greater care in design is required if efficiency is to be secured together with freedom from interaction between the signal and oscillator frequency circuits. Experience has shown that the triode-hexode type of frequency-changer gives the most satisfactory results provided that the correct oscillator circuit is used. No difficulty is found in obtaining oscillation at wavelengths well below 5 metres, but with most oscillator circuits parasitic oscillation causes much trouble. An efficient and smoothly operating frequency-changer is out of the question so long as this trouble persists, and it is very important indeed to avoid it. The writer's experience has been that the commonly used Hartley oscillator is rather prone to generate parasitic oscillation, but that the Colpitt's oscillator is usually quite free from the trouble.

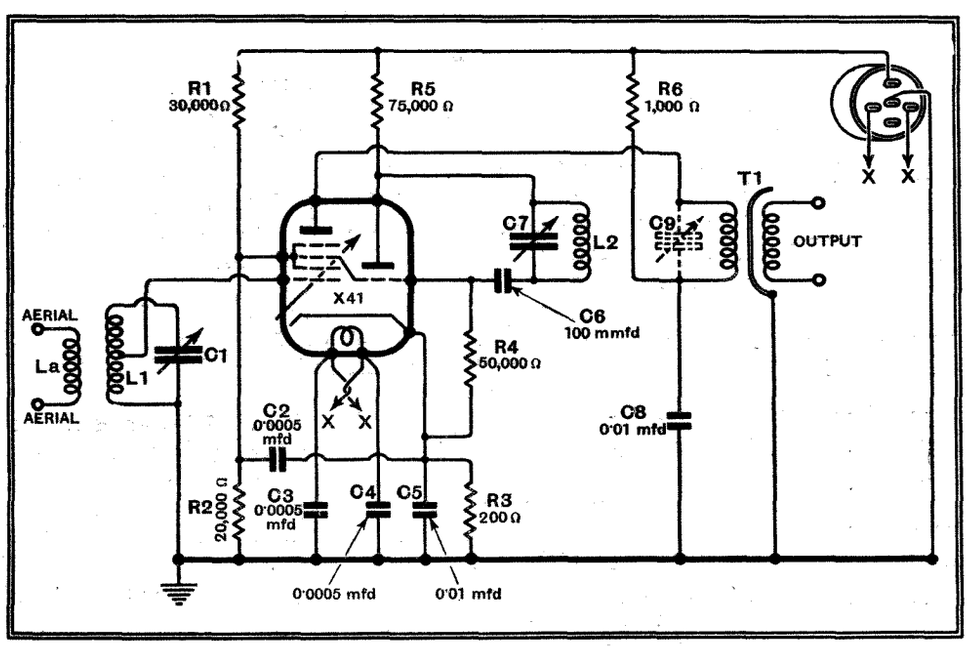

Fig. 1.—The complete circuit diagram of the converter shows that a triode-hexode frequency-changer is used and that there is one signal-frequency tuned circuit.

It was accordingly decided to adopt this oscillator in the converter, and the results have amply justified the choice, no sign of parasitic oscillation being evident at any time during its development. Since the tuning capacity adopted is quite small, it is actually unnecessary to employ a split-condenser in the manner of the conventional Colpitt's oscillator, and a single condenser can be used, the effect of a split condenser being given by the inter-electrode capacities of the valve. This leads to a very simple circuit, as will be seen from Fig. 1, for the oscillator tuned circuit L2 C7 is connected directly between the anode and grid of the triode, a 0.0001 mfd. condenser C6 being interposed to isolate the grid from the HT supply. The grid is returned to cathode through the 50,000-ohm resistance R4, while the anode derives its HT supply through the 75,000-ohm resistance R5.

One signal-frequency tuned circuit L1 C1 is used, and the control grid of the hexode is connected directly to a tapping. This is done partly to reduce the stray capacities thrown on the circuit and partly to reduce the valve damping. At the very high frequencies at which we are working the input impedance of a valve can no longer be ignored, for it may be only a few thousand ohms. With the coils used in this equipment it is found that with the grid connected to a tapping near the centre signal strength is no less than with it joined to the top of the tuned circuit and tuning is noticeably sharper. In addition, the

Converter

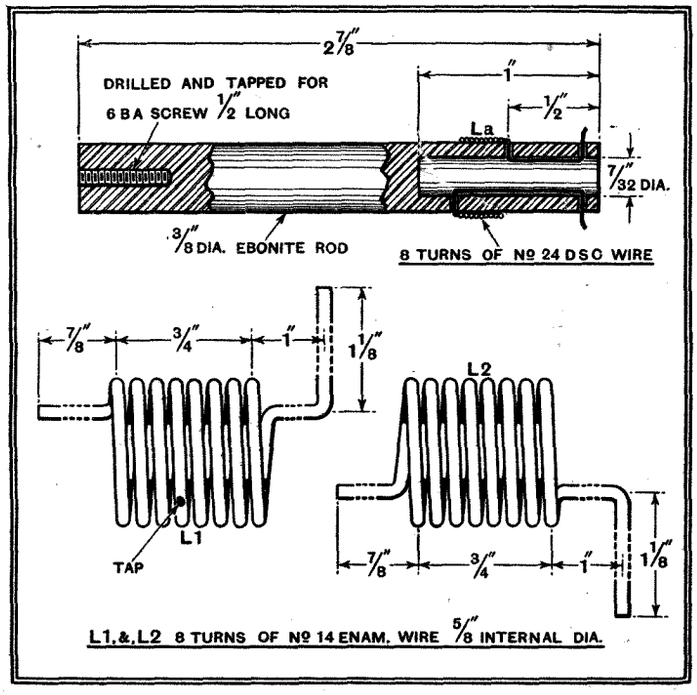

The coils are wound to the dimensions given here with No. 14 enamelled wire.

reduction in stray circuit capacity leads to a reasonably wide wavelength range being secured.

The screen-grid derives its supply of voltage from the potentiometer, consisting of R1 of 30,000 ohms and R2 of 20,000 ohms, and a 0.0005 mfd. by-pass condenser C2 is shunted directly to cathode. Condensers C3 and C4 of 0.0005-mfd. capacity are also joined between heater and earth in order to prevent modulation hum. Grid bias is derived from the 200-ohm resistance R3 shunted by the 0.01-mfd. condenser C5 in the cathode circuit. The output is taken from the hexode anode by means of a screened-primary transformer T1, decoupling being obtained by the 1,000-ohm resistance R6 and the 0.01-mfd. condenser C8.

The photographs and drawings accompanying this article show the details of construction, and little need be said about the mechanical work involved beyond stressing the necessity for very short leads and for rigidity in the wiring. The condenser C2 is mounted directly on the valveholder, being slipped between the pins so that the heater pins lie on one side of it and the cathode and screen-grid pins on the other. Its tags are bent round and soldered directly to the sides of the cathode and screen-grid pins. The grid leak R4 is similarly joined directly between the cathode and oscillator grid pins, the wire leads to it being not more than one-eighth of an inch in length.

The by-pass condensers C3, C4, C5 are all connected directly between the appropriate points on the valveholder and one anchorage point on the chassis, while R5 is joined between the oscillator anode and the supporting pillar for the HT connection. This resistance must be mounted directly on the valveholder with a ⅛in. lead; the length of the lead for its other connection to HT, however, is not important. C6 is joined directly between the oscillator grid and one terminal of the variable condenser C7.

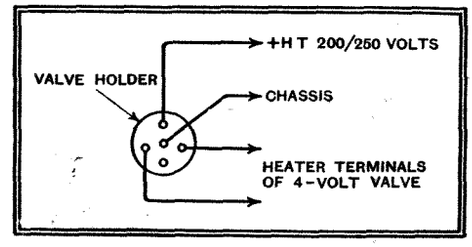

Fig. 2.—A valveholder should be mounted on the receiver and wired to it in the manner shown here, to take the plug from the converter.

Details of the coils are shown in one of the drawings, and are most readily made by winding about 20 turns of No. 14 enamelled wire on a ⅝in. diameter tube. Let the wire slacken and it will be found that it springs out slightly so that the coil is a loose fit on the tube. Then pull the turns apart slightly so that an evenly spaced winding results and cut the coil in halves. Two coils each of ten turns will thus be obtained. At one end unwind half a turn and straighten the wire out for connection to the fixed vanes of the condenser, at the other unwind one and a half turns, straighten the wire and bend it appropriately for the connection to the moving vanes.

With such heavy wire the enamel is easily removed by scraping it with a knife. Some little care is necessary in removing the enamel for the tapping on L1, however, for it must not be removed also from the adjacent turns. This tapping is not at the exact centre of the coil, but at 3½ turns from the high potential end, or 4½ from the earth end.

The aerial coupling coil La is wound

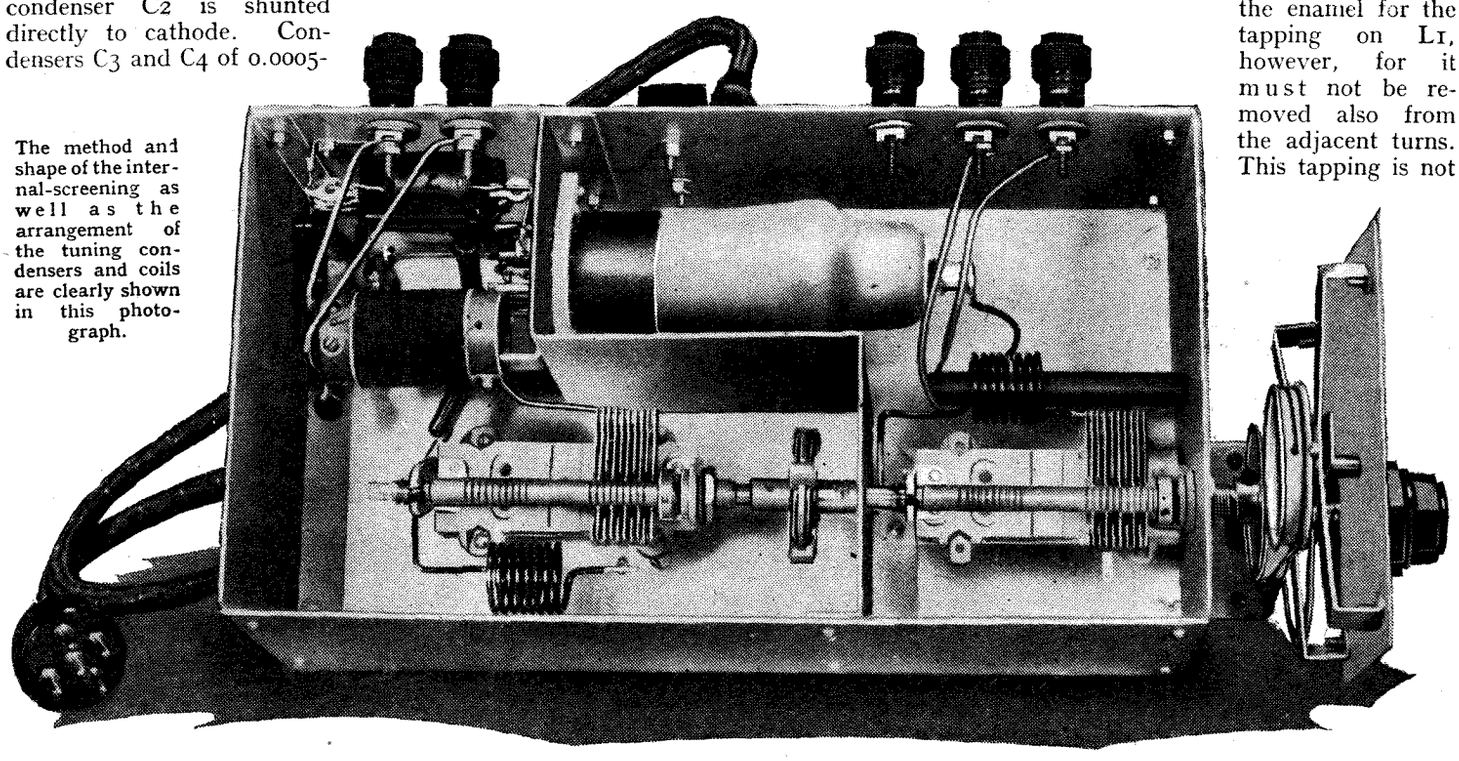

The method and shape of the internal-screening as well as the arrangement of the tuning condensers and coils are clearly shown in this photograph.

Ultra-Short-Wave Converter—

on a length of ⅜in. diameter ebonite rod screwed to the front of the chassis. It consists of eight turns of No. 24 DSC

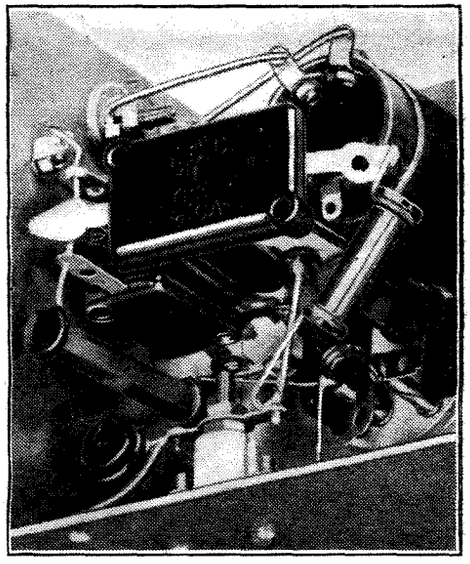

A view of the converter with the end of the chassis removed, showing the components beneath the output transformer.

close wound and is suitable for the average aerial. Provision is made for the use of a dipole aerial by fitting two aerial terminals and then about 3 turns only for La will be needed. Under normal conditions, however, the aerial is joined to one of the aerial terminals and the other is strapped to the earth terminal, to which the earth also should be joined.

LIST OF PARTS

2 Single condensers, 30 mmfds., with extended spindles for ganging, **C1, C7** — **Polar Type "E Special"**
1 Slow-motion condenser drive — **B.T.S. Type TRA/WW**
1 Flexible coupler — **Eddystone 1009**
1 Plug top connector — **Belling-Lee 1175**
1 Valveholder, 7-pin (without terminals) **Clix Short-Wave Chassis Mounting Type V6**
Fixed condensers:—
2 0.01 mfd., **C5, C8** — **T.C.C. "M"**
3 0.0005 mfd., **C2, C3, C4** — **T.C.C. "M"**
1 0.0001 mfd., **C6** — **T.C.C. "M"**
Resistances:—
1 200 ohms, ½ watt, **R3** — **Erie**
1 1,000 ohms, ½ watt, **R6** — **Erie**
1 50,000 ohms, ½ watt, **R4** — **Erie**
1 75,000 ohms, ½ watt, **R5** — **Erie**
1 20,000 ohms, 1 watt, **R2** — **Erie**
1 30,000 ohms, 2 watts, **R1** — **Erie**
1 HF output transformer, T1 — **Scientific Supply Stores**
1 Aerial coil (See text), **La**
2 Coils (See text), **L1, L2**
1 5-way cable with twin 70/36 leads and 5-pin plug — **Goltone**
5 Ebonite shrouded terminals aerial (2) earth, output (2) — **Belling-Lee "B"**
1 5-way connector — **Bryce**
1 Stand-off insulator — **Eddystone 1019**
Container, aluminium, 10½×5½×4in.—with four mounting legs for condenser — **B.T.S.**
Screen, aluminium, 10×4½in. — **B.T.S.**
Bracket for dial — **B.T.S.**
Miscellaneous:—
Peto-Scott or **Scientific Supply Stores** Small quantity No. 14 enamelled wire, No. 16 tinned copper wire and No. 24 D.S.C. wire; 1 length Systoflex. Screws: 27 6BA ¼in. r/hd.; 2 4BA ¾in. r/hd.; all with nuts and washers.
Valve, 1 X41 metallised — **Osram** or **Marconi**

No provision is made for ganging adjustments. The intermediate frequency available being necessarily within the medium waveband, it is so low in relation to the signal frequency that it is not practicable to attempt to differentiate between the signal and oscillator circuits. The theoretical difference of tuning between them is considerably less than the probable ganging errors. Both circuits are, in consequence, nominally tuned to the same frequency, and this results in there being two tuning points for every station and no protection against second-channel interference. This is unavoidable unless an intermediate frequency of at least 5 Mc/s is used, and this is impossible with a converter.

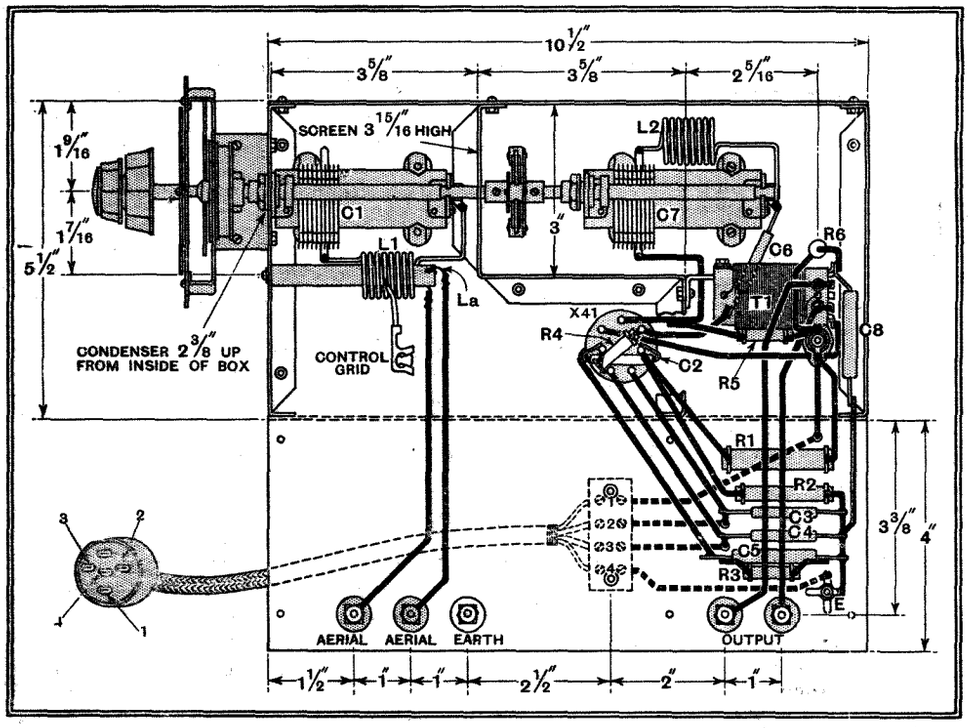

Full details of the construction and wiring of the converter are given in this drawing.

Correct ganging is consequently secured by making the inductance and capacity of the two circuits equal. If the coils are carefully constructed they will be sufficiently alike, and if the wiring is carefully carried out the stray capacities will be equal on the two circuits. No trimming condenser is consequently fitted. The ganging is readily checked by slacking off the coupling between the two condensers and adjusting the circuits independently. If all is in order it should be found that for one of the two oscillator settings the vanes of both condensers are enmeshed to the same degree.

The receiver should be set to operate on the medium waveband and the two output terminals joined to the aerial and earth terminals on the set by a foot or so of twisted flex. Power for operating the converter can be obtained from the receiver by fitting it with a five-pin valveholder to take the plug connector. The connections in the receiver should be made as shown in Fig. 2.

So far nothing has been said about C9, which is shown in Fig. 1 connected across the primary of T1. This is because it is not always necessary. Whether or not it is required depends on the design of the input circuit of the receiver with which it is used. When the condenser is needed, it should be a 0.0005 mfd. compression type, and should be adjusted for maximum signal strength, its setting depending upon the tuning of the receiver. It is not required with sets such as the QA Super and Variable-Selectivity IV, and with these sets a condenser of 0.0001 mfd. should be joined in series with the inter-unit lead to the aerial terminal of the receiver.

In general, the receiver should be tuned to its most sensitive point in the medium waveband, but not, of course, to such a wavelength that interference is experienced from a medium-wave station. Tuning on the converter is sharp, but depends

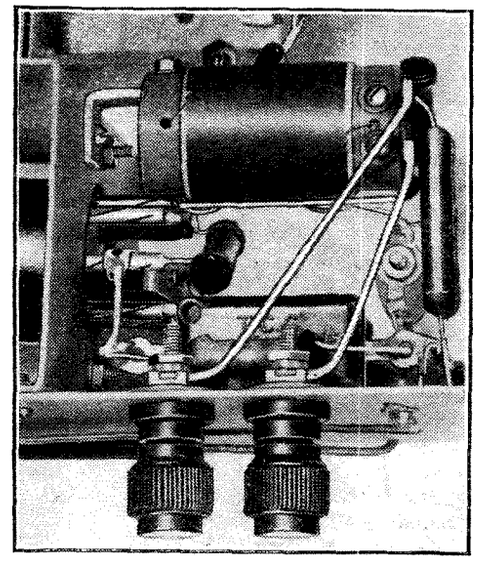

An upper view of the oscillator section of the apparatus.

Ultra-Short-Wave Converter—

greatly on the selectivity of the receiver. With selective sets it will probably be necessary to stand the converter on sponge rubber to avoid howling due to acoustic feed-back from the loud speaker to the vanes of the variable condenser.

Too much should not be expected in the way of signals at first, for most present transmissions are of an experimental nature and irregular in their operating times. In most urban districts, however, it should be possible to gauge the efficiency from the amount of ignition interference experienced when a car passes the house. This should be fairly loud with a sensitive receiver and at its greatest around 7 to 8 metres.

The tuning range of the converter is from a little over 5 metres to about 10 metres, 7 metres being almost exactly half way round the dial. The range may, of course, be extended lower if it is required to take in the 5-metre amateur band by using slightly smaller coils. This will naturally involve a curtailment of the upper wavelengths, the ratio of maximum to minimum wavelengths being constant whatever coils be used.

Tested in London with the QA Super, the converter brought in several experimental transmissions at full loud speaker strength, and proved sensitive throughout its tuning range. Tuning was critical but actually rather less so than many ordinary short-wave sets.

Electrical Interference

REPORT OF THE I.E.E. COMMITTEE

IN 1933 the Council of the Institution of Electrical Engineers appointed a "preparatory Committee" to review the subject of interference with radio reception. This Committee reported in April, 1933, and as a result of this preliminary report, the Council of the Institution appointed a representative Committee, which has just presented its final report and recommendations on the problem. The terms of reference of the Committee were as follows:—

(a) To consider the report (drawn up by the Preparatory Committee appointed by the Council) setting out the problems to be solved.

(b) To make recommendations as to the steps, if any, to be taken to secure the elimination or mitigation of electrical interference with radio reception.

(c) In connection with (b) above, the Committee is requested to consider, inter alia, the following specific matters:—

(i) The degree of immunity of each type of apparatus, and the degree of interference from each type of electrical plant and the best means for its elimination.

(ii) The desirability of embodying in specifications for new plant the requirements for interference suppression.

(iii) The desirability, or otherwise, of legislation.

The Committee shows in its report that it has not merely been studying the subject, but has stimulated action by various bodies with a view to settling such questions as standards and the measurement of interference. The committee has also encouraged as far as was possible the application of radio interference suppression devices. The Committee was very fully representative of the electrical and other interests concerned, including all sections of electrical manufacturers, the Post Office, the B.B.C., and the radio industry.

The full text of the Report is available from the I.E.E., but a summary of some of the principal observations and recommendations will be given here.

No proposals are made to clear the ether of interference such as would disturb the reception of weak stations where considerable amplification has to be resorted to at the receiver, presumably because it is considered that the first consideration must be to make reception of the local B.B.C. stations clear of interference. The proposal in the report is that there should be a difference of at least 40 decibels between the strength of the wanted signal and the interfering field—that is, assuming the wanted signal to be of the order of 1 mV/m, modulated 80 per cent. A method of measurement has been agreed upon, and instruments have been developed capable of indicating with sufficient accuracy the degree of interference.

With the introduction of a television service, automobile ignition systems may be found to cause interference, but it is stated that the degree of trouble to be experienced from this source cannot be known until the television service begins. It is pointed out that traffic signals, which would ordinarily have been serious offenders in the matter of interference, have from the start been made interference-free, complying with a British Standard Specification approved by the Ministry of Transport. A second case in which much progress has been made is that of trolley buses, where, again, the Ministry of Transport has acted.

Compulsory Powers

Perhaps the most important view expressed in the whole of the Committee's report is that which relates to compulsory powers to ensure that the remedies are applied to interfering equipment. This section is therefore quoted in full:—

"As it became clear to us that the various technical aspects of the problem were approaching solution, we felt we ought to give renewed consideration to the important question whether compulsory powers should be conferred on some authority to require radio-interference suppression in cases in which it appears that this will not be achieved effectively without the application of such powers. It became evident from the discussions of the Committee that the majority of members did not consider that effective interference suppression would result if the improvement of the position were to be left solely to voluntary effort. The manufacturers of appliances and plant which are liable to cause interference definitely support this view, and they consider that there should be some recognised Mark which could be affixed to all portable appliances as a guarantee that such appliances comply with the requirements, and that the sale of appliances which do not meet with these requirements should be prohibited. Further, it is essential that imported articles should be subject to the same regulations as home-produced articles and should bear the Mark, and it is only through legislation that this question can be dealt with successfully."

The Committee in its recommendations differentiates between existing apparatus already installed and new equipment offered for sale. The cost of correcting existing apparatus, it is pointed out, is undoubtedly higher than the cost involved if the apparatus is initially designed to be interference-free. In a very large number of cases where the Post Office has dealt with complaints by listeners of interference from local electrical apparatus, the owners of the apparatus have been willing to meet the cost of fitting suppressing devices, and it is only in a comparatively small number of cases that the owners have refused. It is suggested that whilst regulations can fairly be made which will make it compulsory for all new equipment to be interference-free, it is a question of general ethics or of state policy whether it would be right to compel the owner of existing apparatus to correct it at his own expense. Failure to maintain apparatus in good condition is regarded as an instance where the owner should be held responsible. The Committee expresses the hope that every encouragement will be given to the goodwill already shown by most owners in voluntarily correcting existing apparatus.

The report concludes with a list of recommendations, the first of which is that the Electricity Commissioners should be given powers to issue Regulations to suppress interference with radio reception caused both by new and existing electrical appliances, plant or machinery; the Commissioners to have power to require a distinguishing Mark to appear on apparatus to be sold after dates to be stated, as a guarantee that it complies with the regulations; this distinguishing Mark to apply to imported as well as to British-made apparatus. The Post Office, it is recommended, should have powers to enforce the application of the regulations made by the Electricity Commissioners, and that all costs incurred by the Commissioners and by the Post Office in investigating complaints and enforcing the regulations should be defrayed out of the quota of the Wireless Receiving Licence Fees which the Post Office retains.

The Home Laboratory

II.—ORGANISATION

By M. G. SCROGGIE, B.Sc., A.M.I.E.E.

SUGGESTIONS for making the best of limited space; also hints on the layout of apparatus and the installation of those facilities which save so much time in carrying out experimental work

LAST week I remarked that it is difficult to define how much is necessary to constitute a laboratory. It is still more difficult to give advice as to the layout and equipment when not only the situation, facilities and financial resources are unknown, but even whether the power supply is AC, DC or gas! As it is the man with unlimited means who is least in need of further encouragement, I make no apology for keeping chiefly in view those experimenters who are obliged to make the best of a situation.

In such cases there may be no choice whatever as to premises, nor, perhaps, even the exclusive use of a room. Where the house is old and large the chances of appropriating at least an attic or basement are quite good, but a modern house is generally the next size smaller than that which will just hold the family. As regards choice between attic or basement, in the absence of further data I, personally, would plump for the latter, because a screened transmission line can be used to make connection with a distant aerial, and a short, direct earth lead is most desirable. This may not apply so emphatically to a steel-framed building, such as that at the top of which *The Wireless World* laboratories are situated, because such a building may itself be regarded in some respects as an excrescence of earth, in spite of any views to the contrary held by the proprietors.

If the worst comes to the worst one may have to consider a roof loft. It has been claimed that lofts make admirable workrooms. My personal views do not incline in this direction, for my experience of them is that they can never for long be other than dusty; that they enjoy what the geography books call a Continental climate, being too cold in winter and too hot in summer; and that the trap-door constitutes a grave danger to the life and limb of the preoccupied research worker. But, nevertheless, I have seen a loft laboratory used successfully for really advanced work. Seclusion is an advantage that can hardly be over-estimated, and one gets it better in a loft than in most places. An aerial lead-in can generally be arranged to come conveniently above the operating bench, but it is worth going to the trouble of ensuring that it is truly weather-tight. Another advantage is that one can string wires around, and generally damage the premises in a manner that would never be tolerated downstairs —or should we say downladders?

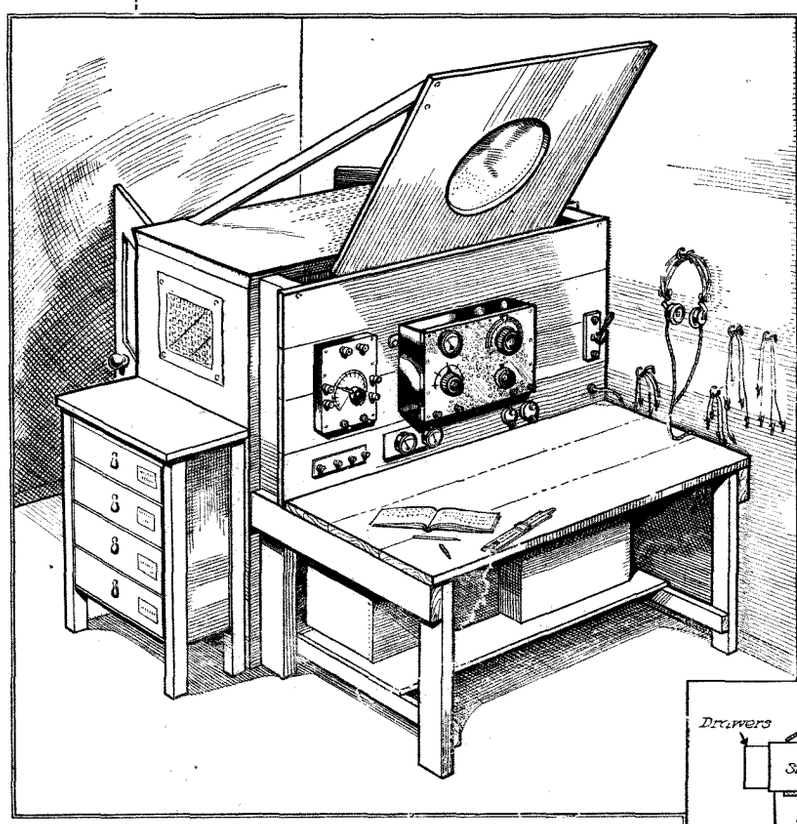

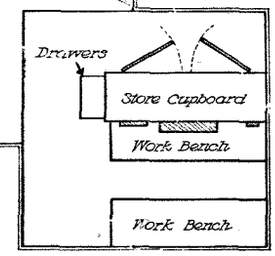

Fig. 1. Plan and perspective views of a compact laboratory layout, with a store cupboard and workbench back-to-back. Note space between for concealing wiring, shelf below for batteries, etc., vertical mounting of apparatus, and hooks for connecting leads.

Sometimes an outdoor shed can be annexed, or even built. Conditions here are not unlike those just described. In winter it is difficult to make it an attractive retreat, and damp weather has disastrous effects on the equipment, unless there is the almost unthinkable luxury of permanent heating. In summer, too, both worker and apparatus may suffer from the climate. But oppressive restrictions on the research worker are less likely to be enforced here than indoors.

If considerations of comfort, convenience or necessity indicate an indoor room, and the experimenter is not in a position to exercise the rights of dictatorship therein, it may be possible to come to terms with other interests by carrying on the more unwelcome activities—such as actual construction, and perhaps accumulator charging—out in the shed or garage. If the laboratory must, as a last resource, be shared, the guiding policy is to arrange for everything to be shut up under cover and out of sight when not in use. An old roll-top desk is an example of something that would make an excellent nucleus; the desk surfaces can be used for working, and the pigeon-holes and drawers for storing apparatus, etc. There is a good second-hand market in these desks. An old-fashioned wardrobe of ample proportion, with sliding shelves, makes an excellent store cupboard, and might even be adapted as a sort of work cabinet. There are other varieties of furniture that can be used for working and for storing the apparatus; a search around the house or in the local furniture market will probably suggest useful possibilities.

Whether or not a strict cover-up policy is forced on the experimenter by other members of the community, it is not a bad policy to adopt anyway. It is worth acquiring such cupboards, bureaux, filing cabinets, or nests of drawers as may be available, for storing instruments, components, tools, wire, valves, papers, and so forth. Good organisation in this respect is worth while in saved time and

The Home Laboratory—

space, creates a favourable impression, and keeps things in good order and condition. A chest of many shallow drawers is much better for storing the smaller articles than the usual deep drawers which necessitate things being bundled on top of one another. Some drawers should be subdivided, eggbox fashion, to take valves, resistors, fixed condensers, small tools, etc., in classified arrangement, so

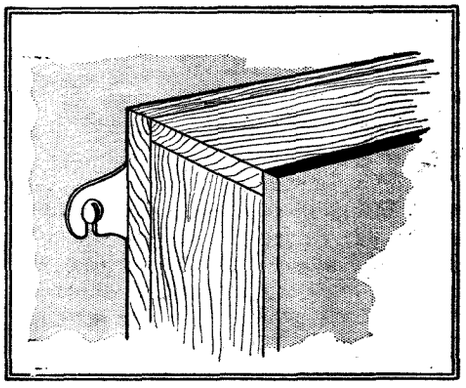

Fig. 2. If units are provided with slotted mirror plates fitting over screws in the backboard, they may be accommodated vertically instead of occupying valuable bench space, and are easily put out of the way when not required.

that it is not necessary to rake through the whole lot every time in order to find the right denomination. Matchboxes are useful for screws, terminals, etc., either by using the trays to subdivide a shallow drawer, or by gluing a stack of the complete boxes together to form a nest of small drawers, with boot-buttons for knobs.

A Compact Arrangement

Space is nearly always at a premium; and while it is very nice to have plenty of large tables or benches on which to set out one's work it is very seldom that there is room for this sort of layout. It is necessary, then, as in the city of New York and for the same reason, to resort to vertical building. A very compact arrangement consists of a wooden cupboard placed, not in the usual position against the wall, but sticking out into the room, so that the back can be used for supporting instruments, switchboards, shelves, etc., above the workbench. (Leave a space behind the backboard for wriring.) If there is room, one may have further benches around the working space, forming a sort of cubby-hole where everything is near at hand, except the less-used gear which is kept on the other side. Fig. 1 shows a layout of this type.

At all costs, the tendency to use bench-top space for storage must be combated. If it is not, the actual working space soon becomes crowded out. It is a good idea to provide frequently used units such as oscillators and meters with mirror plates or other convenient fittings enabling them to be hung above the bench.

If it is decided to construct a workbench, instead of making do with any old kitchen tables that may be available, it is wise to see that it is strong and rigid. Boards invariably shrink and warp, leaving crevices for small screws to hide in, so a sheet of thick linoleum over the top is very pleasant for working. A shelf near the ground helps to brace the bench, and is most useful for supporting batteries, power units, and other heavy equipment.

Then there is wiring. If there is company's supply, and more especially if it is AC, there should be plenty of points. When there is a soldering iron, a check receiver, a mains-driven oscillator, and a valve heating transformer going, it may be difficult to find another point to which to connect a bench lamp, a heater, or fan, if there are not plenty of sockets. It is a good policy to scatter sockets about fairly freely, each separately switched in the "live" side. A good place is just underneath the top surface of the bench.

Avoid Shoddy Mains Wiring

And here a warning must be sounded. There have been some sad examples of what the amateur and even so-called professional wireman can do. Bits of ordinary wire twisted around nails, and so forth. There are several reasons why you should make a proper job of it. One is that if you do not the supply authority has right of action against you. Another is that shoddy wiring is a cause of fires. And another is that it leads to leakages that introduce hum and other undesirable effects, shock, and breakdown. So use lead-covered electric lighting cable of good quality, with all sheathing bonded together and soundly earthed—preferably by a different connection from that used for radio. Probably the whole lot of sockets will have to connect to the mains at some one original point in the room. Try to arrange matters so that, if a fuse goes because of some work being done, it does not plunge the place in darkness. For example, if the bench connections *must* be taken from the branch lighting circuit, provide fuses on the bench sub-branch of a slightly lower current rating than those protecting the whole branch. And remember that any mistrust with which the supply authorities may regard the system will be greatly intensified if they find lamps being used on a power circuit, at a lower tariff.

The need for good screening and earthing is more emphatic when DC is concerned, because the high-pitched commutator ripple has a way of getting mixed with the output of amplifiers, and is particularly unhelpful in bridge work.

Loud Speaker Extensions

Aerial and earthed connections are needed, of course; and they should certainly be independent of those used for the household receiver. In fact, it is a great mistake to attempt to do without an entirely separate family listening system. But it is often very convenient; when the lab. is in a different room, to have at least one pair of wires running between the two. And if, as one has a right to expect in an experimenter's house, there is loud speaker extension wiring all over the place, some way of tapping on to it in the lab. is useful. An interconnection system is valuable also if for any reason it is necessary to split up the lab., even if it is only a matter of two benches in different parts of a room. A number of wires, preferably of really heavy gauge, joining such benches and brought out to terminal strips or sockets, enable these parts to be used as a whole. If all of one space is occupied by the source of a test signal, for example, the signal can be piped through this line and used elsewhere. Or power supplies from a common source can be distributed. Even when mains power is available it is difficult to get on without batteries altogether, and some sort of switchboard for controlling them may be worth having.

Lastly, one must not fail to lay in a good stock of flexible connecting leads of various lengths from a few inches up to a yard or two; some with tag or tinned ends, and some with crocodile clips, single and twin. Nobody seems yet to have entirely solved the problem of how to store them neatly so that the right type and length can be instantly selected, but perhaps a series of cup hooks serves the purpose as well as anything.

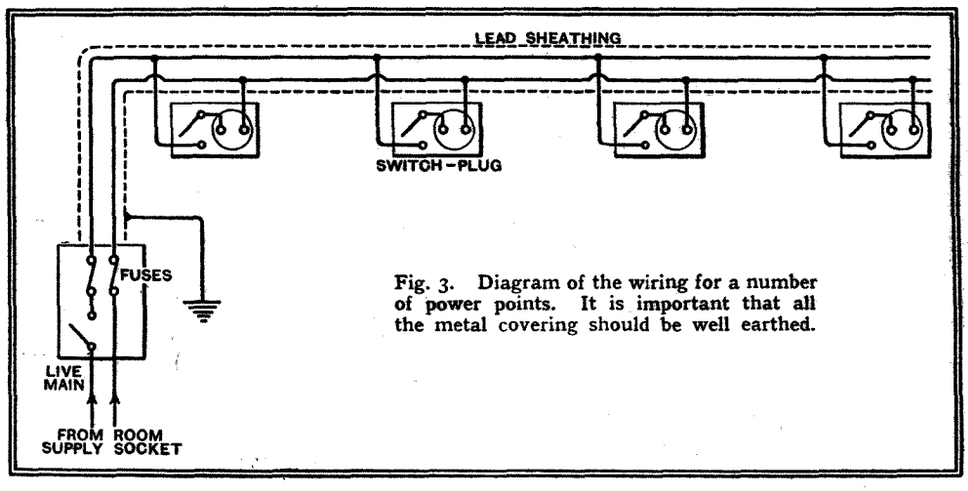

Fig. 3. Diagram of the wiring for a number of power points. It is important that all the metal covering should be well earthed.

Loud Speaker Inter-Communication

By
J. H. REYNER, B.Sc., A.M.I.E.E.

METHODS OF AVOIDING ACOUSTIC REACTION

WHEN a loud speaker and a microphone are operating in close proximity, there is always the probability that acoustic reaction may cause a continuous singing note. Room-to-room intercommunication systems employing loud speakers instead of earphones are particularly liable to such troubles unless precautions such as those discussed in this article are taken

AN occasion recently arose requiring two-way internal loud-speaker communication. At each end was a microphone and loud speaker, and the conditions were such that the microphone was required to be of a fairly high sensitivity so that a person speaking in a normal voice several feet away was still able to provide good loud-speaker strength at the distant end. Two individual amplifiers were provided, one between each microphone and its corresponding loud speaker, and in view of the high gain required it was not surprising that an all-round "sing" was obtained.

The trouble in such cases is usually that any disturbance at the first microphone is duly amplified and produces a noise in the loud speaker at the distant end. Sound waves radiated by this loud speaker are then fed back on to the local microphone thus producing a disturbance which is amplified by the second chain where it introduces a noise in the first loud speaker.

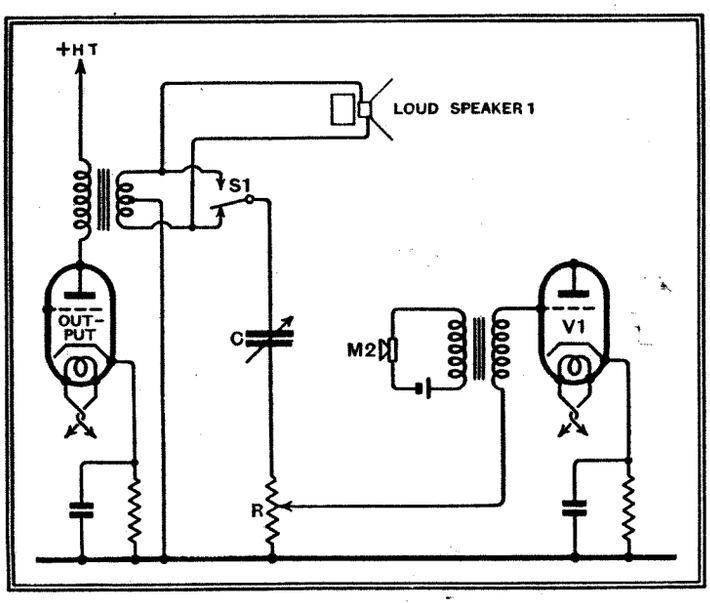

Fig. 1.—An experimental circuit in which anti-phase feed-back is used to combat acoustic reaction.

The acoustic reaction from this on to the first microphone is more than sufficient to cause a rapid build-up culminating in a continuous sing.

Though the trouble could be minimised by careful placing of microphone and speaker at each end, it was still impossible to develop the full gain desired, while any sudden variation of conditions—even the alteration of reflections, caused by a person moving about—was sufficient to start the chain off.

It was therefore necessary to devise some means of eliminating this interaction, while still allowing each amplifier to develop full individual gain, and the method finally arrived at was completely successful, being quite reliable in action and not unduly critical in adjustment. It is, however, of interest to discuss the earlier and only partially successful experiments which lead up to the final results.

The first arrangement tried was that of Fig 1. Since the root trouble arises from the acoustic interaction between the loud speaker and microphone at either end, an attempt was made to counteract this by an electrical feed-back of energy in the opposite phase. The output transformer was centre-tapped and the voltage fed off one side through a condenser C and a potentiometer R. A small portion of the voltage developed across the latter was introduced into the grid circuit of the amplifier connected to the second microphone. Switch S1 is for reversing the phase so that the electrical reaction shall be in the opposite sense to the acoustic feed-back, while the condenser C in conjunction with the resistance R was intended to give a further phase displacement since it became clear that on investigation that the phase of the electrical feed-back would not have to be exactly 180 deg. out of phase with the acoustic reaction but some slightly smaller value.

The method showed signs of working and it was possible to increase the gain of each amplifier beyond a point at which singing started without the compensating circuit in operation. The correction, however, is only accurate as regards phase for one particular frequency, and if the amplification was increased too much the only effect of the corrector was to merely alter the tone at which the whole chain oscillated. Moreover, the compensation was not correct on transients, and in many cases the very act of speaking was sufficient to start the singing, although under quiet conditions it was silent.

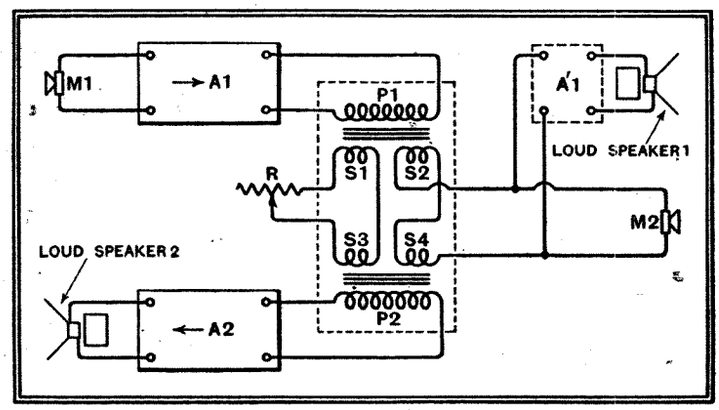

Fig. 2.—A balancing system which was found to be incapable of coping with the high gain of the amplifier.

The next attempt was based on the well-known hybrid coil which is used in radio-telephone practice for converting four-wire communication channels into an ordinary two-wire system. It consists of a transformer having two primaries and four secondaries, cross-connected as shown in Fig. 2. Any voltage fed through the amplifier A1 induces voltages in S1 and S2. These voltages pass current through the microphone M2 and the loud speaker LS1 in parallel, and the secondary S4, and also through the balancing resistance R and the secondary S3. Since there is a reversal of connections between S2 and S4 it follows that if the resistance R can be made equal to the effective resistance of S2 and LS1 in parallel, these two currents

Loud Speaker Inter-Communication—

will introduce equal and opposite voltages in P2 and no voltage will be fed on to the input of the amplifier A2. Since LS1 and M2 are in parallel there is no acoustic interaction between them unless they are placed very close together.

This method again operated up to a point but ultimately failed owing to the high gains involved in the amplifiers. If A2 has a gain of 5,000 it means that the balance obtained on the hybrid transformer must reduce the feed-back voltage to something very much less than 1/5000th of its original value. Otherwise, the noise emanating from LS2 will still be of the same order as it is at the output end of A1, and this will be more than sufficient to cause singing.

This difficulty was finally overcome by splitting the amplifier A1 into two parts and incorporating the greater part of the gain after the hybrid transformer, as shown dotted at A'1. This was successful up to a point at which singing began to appear between LS1 and M2. At this juncture, however, another difficulty made its appearance which finally lead to the abandonment of the idea. The successful operation of the scheme clearly depends on a very accurate balance. Carbon microphones were being employed and if anyone accidentally knocked against the microphone or even if there was some unusual vibration in the room, the steady resistance of the microphone altered by a sufficient amount to throw the balance out. Under many conditions this difficulty would not arise but in the instance under consideration the risk was considered too great and so other methods were considered.

Muting the Amplifier

The next attempt was made from a different angle—that of muting one of the amplifiers when no signals were being received on that chain. The basic arrangement is shown in Fig. 3 where it will be seen that the microphone feeds two valves in parallel, V1 and V3. V1 is normally biased but, V3 is over-biased to such an extent as to be inoperative. Since this valve is the first of the speech amplifier chain no signals are transmitted through to the loud speaker and hence no singing can take place. The reverse chain was left normal, so that speech could be transmitted over this line unimpaired.

When the valve V1 receives speech input from the microphone M1, however, it feeds amplified voltage on to V2 which is arranged to operate as an anode bend rectifier. The anode current increases, causing a positive voltage to be developed across the cathode resistance R, and this offsets the negative bias on V3, opens up the speech amplifier and starts the chain working. The actual percentage of the full release voltage available is variable by tapping down the resistance R which enables the conditions to be set so that ordinary background noise picked up by the microphone is just insufficient to release the valve V3.

This method was perfectly satisfactory under quiescent conditions, but it was found that as soon as anyone started to talk through the microphone M1 a sing rapidly built up, due to the fact that once V3 has been released the whole chain is in operation and the full gain of both amplifiers is available.

It was hoped that by making the time constant of the various condenser-resistance combinations in the release amplifier V1 and V2 sufficiently small, the opening up and shutting down of V3 would be sufficiently rapid to counteract any sing, but this did not prove to be the case. At the same time the method did show sufficient promise to indicate that had a release network been fitted on both amplifiers the scheme would probably have worked quite successfully except under the one condition where both parties were speaking at once. With two sing-suppressors in operation like this, the full gain is never in operation, for when one amplifier is working the other is shut down, except under the condition just mentioned.

Unfortunately, with most conversations there is a tendency for someone to speak out of turn and this immediately re-introduces the sing although it will shut down again immediately the interruption ceases. An alternative arrangement would be to give one amplifier control so that as soon as this amplifier released, the other amplifier was automatically muted, and this was the arrangement finally adopted.

It was, however, found better to achieve the desired result electro-mechanically by the introduction of a small relay in accordance with the arrangement shown in Fig. 4. Here the valve V1 is the last valve in one of the amplifiers. The anode circuit contains an output transformer which feeds the loud speaker through the contact of the relay. As shown in the diagram, this contact is broken and the circuit is through to the distant loud speaker. Thus the line from the control end to the distant loud speaker is through, and speech can be carried out over this channel.

If the distant microphone comes into operation, however, speech impulses will reach the valve V1, and the voltage developed at the anode of this valve is passed on through a condenser and potentiometer to the grid of the valve V2. This valve is operating as a grid rectifier so that it is normally passing anode current which pulls the relay over. The application of signals to the grid of this valve causes the anode current to decrease, the relay armature drops back and makes the circuit of LS1, so that the speech currents in the anode circuit of V1 are able to produce

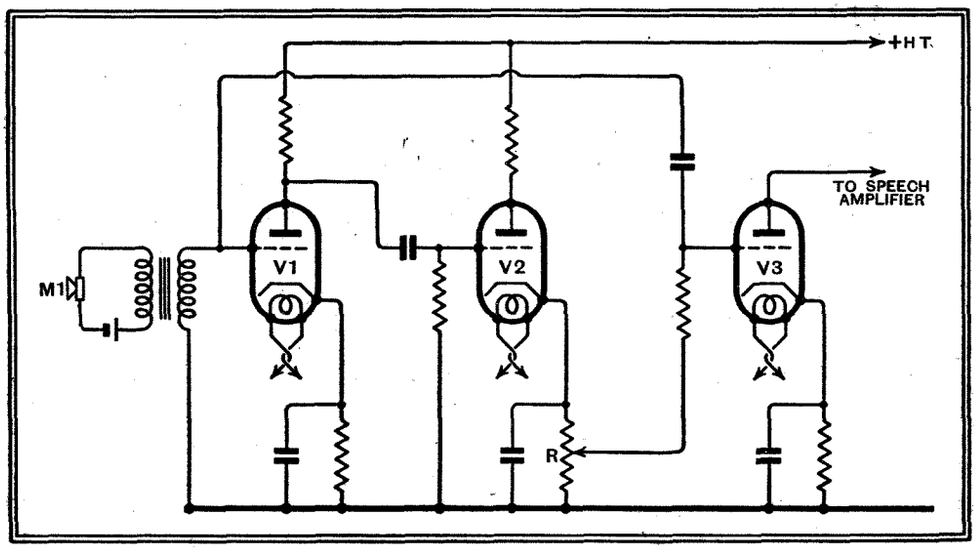

Fig. 3.—A system depending on the muting of the inoperative amplifier.

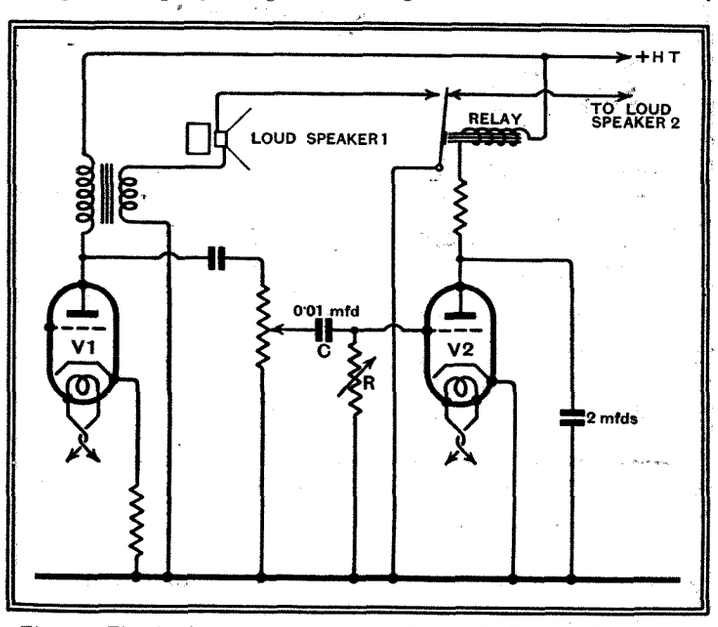

Fig. 4.—The final arrangement, with relay-controlled muting of the inoperative amplifier.

Loud Speaker Inter-Communication—

audible sounds from loud speaker No. 1.

This very act has automatically disconnected the loud speaker at the distant end and hence singing back is impossible. As soon as the voice at the distant end ceases the anode current of V2 rises again, the relay pulls over and the distant loud speaker comes into circuit once more ready for the reply. V2 should be a small power valve taking 15 to 20 mA at zero bias. The resistance in the anode circuit cuts down the anode voltage to a suitable amount—about 100 volts.

It is necessary to arrange a small delay on the relay operation so that the contacts do not chatter, and this is accomplished by the network CR, constituting the condenser and grid leak which provides the rectification action. By adjustment of the resistance R sufficient hang-over can be obtained to keep LS1 in circuit during any normal speech, while any pause of more than about a second causes the relay to pull up again and changes over the connections to the other loud speaker. If the person at the distant end continues to speak the relay will drop again and reconnect LS1.

It is important that the relay shall be in the low-potential circuit, i.e., on the secondary side of the output transformer. Otherwise the capacity across the contacts may allow energy to be transferred to the "dead" speaker to permit singing.

The potentiometer P has once again to be adjusted so that ordinary background noise does not operate the relay, but anything above this level does. It might be thought that there would be some loss of the first few syllables of the speech, but in practice if a sufficiently rapid relay is used (such as the Bulgin type RC11) there is only the faintest clipping which is barely noticeable, and the system operates consistently and reliably.

RANDOM RADIATIONS

By "DIALLIST"

Good News

FOR some time I have been expecting to hear that there were to be reductions in the prices of valves, particularly those of the mains variety, which were far too dear. But, frankly, I hadn't anticipated that prices would come down with such a bump. Five shillings off HF pentodes and frequency changers and four shillings off LF pentodes and triodes in general is fine. Battery users don't get quite so much, but they also don't do too badly with reductions of four and six on frequency changers, eighteenpence on pentodes, both HF and LF, and on screened grids, a shilling on power valves and ninepence on triodes.

I am sure that this bringing down of prices is good policy on the part of the valve manufacturers. I hope that it will be the first step towards the production of much bigger sets in this country; one thing that has been very much against them is the British public's fear of having to replace a lot of valves at high cost. It should also mean that fewer people will now run their valves to the very last gasp, keeping them going so long as they will work in some kind of way. In any event, I predict bigger valve sales in the future.

Sporting Saturdays

THE B.B.C. has been doing us proud in the matter of sporting broadcasts on Saturday afternoons of late, and as nearly every Saturday for some little time has been wet in my locality these broadcasts have provided no bad substitute for going out and doing things one's self. On fine Saturday afternoons, though, they must be very largely wasted, since many of those who would be most interested in hearing them are out in their cars or playing cricket, tennis or some other game. Wouldn't it be a good idea to "can" these commentaries by means of the Blattnerphone and to give us half an hour of sport relays either on Saturday evenings or in those brighter Sunday programmes about whose imminence we are hearing so much just now?

Elasticity Wanted

And there's one other suggestion I want to make whilst I'm at it. Arrangements for afternoons when the microphone is scheduled to visit two or three different sports centres might well be rather more elastic than they are now. The other day, for instance, we were taken over from the athletic championships at the White City to the cricket ground at Lord's just when some of the most exciting races were due to come on. It was rather a blow to find that the Eton and Harrow match had been completely washed out by rain, and that there was nothing for the commentator to describe save the deserted ground, which he did most ably and graphically for about a quarter of an hour! I think that we might have been taken back again to the White City after a brief announcement that there was nothing for us to hear from Lord's. It surely wouldn't be difficult to arrange that if there was nothing doing at one centre, more time should be devoted to others where thrills were to be found.

Insuring Sets and Service

A READER who hails from Warrington has very kindly sent me particulars of a scheme for the fixed-price maintenance of radio sets which is operating successfully in his locality. You may remember that a week or two ago I suggested that something of the kind would be very popular amongst listeners, and that it might be good business for dealers to think it over. The Warrington scheme strikes me as very good. For a console or table set the subscription is 30s. a year. For this the firm responsible undertakes to keep the set in thorough working order, replacing any valve that becomes a casualty or loses 60 per cent. of its efficiency, to examine and tune up the set three times a year, and to maintain a trained staff of servicemen as well as fully equipped workshops. The same terms apply to battery sets, but do not, of course, cover the recharging of accumulators or the replacement of run-down high-tension batteries. My idea that such a maintenance plan would go well with listeners is borne out by the experience of the firm in question. When they started it was expected that from 20 to 25 per cent. of those who bought new sets would take it on. To their surprise they find that the figure runs to about 85 per cent. There seems to be something in it, doesn't there?

Doctoring by Wireless

A NOVEL and most useful radio service is run by the U.S.A. authorities for the benefit of coastal shipping of all kinds from barges to brigantines and from trawlers to tankers. None of these small ships carry doctors. Illnesses or accidents which are quite beyond the rough-and-ready first-aid knowledge of their skippers are bound to occur. When something of this sort happens they call up a special shore station, where at certain hours doctors of the Public Health Department are in attendance. A long-distance examination of the patient takes place by means of questions and answers in Morse, and then come instructions of the fullest kind. This is a wonderful service, and the good that it does not only in saving lives that might otherwise be lost but also in alleviating pain and suffering is almost incalculable. The idea is so excellent that every civilised country in the world that has a sea coast should adopt it without delay.

"Regional" Muddle

THE B.B.C. doesn't seem to be able to make up its mind about the Regional stations. In the days before simultaneous broadcasting was developed to any extent Regional directors provided their own programmes, and all was well so long as they kept within the amount of money allotted to them. With the coming of S.B. the tendency was more and more to centralise the Regionals, until it was realised last year that this was being overdone. Then we were told that Regional directors would have a much freer hand, but now comes the news that plays, at any rate, must not be selected without reference to the central Drama Director in London. The Ullswater Committee took the view that the Regionals should be as regional as possible, and I am thoroughly in favour of letting their directors get on with their jobs with the least possible interference from headquarters.

A New Spanish Custom

IT often seems to me that existence in this country is altogether too humdrum. We never seem to get the excitements which add such a spice of life in some foreign countries. Abroad, broadcasting stations have been bombarded with field guns, blown up by bombs, captured by rebels and jammed by those who didn't like their programmes. In Spain only the other day a gang of desperadoes belonging to some political party or other rushed the local broadcasting station, bound and gagged the announcers, and proceeded to pour their own propaganda into the microphone. That was pretty good; but there was more to come. Once the station had been recaptured, enraged listeners sallied forth and burnt down the headquarters of the political party responsible. Can you imagine gunmen supporters of one political party occupying Broadcasting House and the subsequent blowing up of the National Liberal Club as a reprisal? You can't? I thought not. The spirit of adventure is no longer what it was with us!

Current Topics

Events of the Week in Brief Review

Radio Pioneers Honoured

IT is stated in Paris that the new P.M.G. is proposing to issue postage stamps bearing the heads of General Ferrié and Edouard Branly, the French radio pioneers. These stamps will be an addition to the special series bearing the heads of other famous Frenchmen.

Poland and Television

POLAND has followed other countries in deciding to establish a high-definition television service on ultra-short wavelengths. It is stated that the Polish Ministry of Communications has been influenced by the success following the recent German trials, and experimental work is to begin immediately.

Canada Copies B.B.C.

IT appears that Canada is likely to model its broadcasting organisation on that of this country, for a special committee set up by the Canadian Government to investigate and report upon various methods of controlling broadcasting has just delivered its findings. The committee recommends a system similar to that of the B.B.C. It is proposed to have nine governors who will, however, be honorary.

French Announcers' Poor Pronunciation

COMPLAINTS have already been made by French listeners that certain French announcers speak far too rapidly. The latest complaint is that they do not pronounce French words correctly. The whole trouble has arisen through the employment of announcers having a strong provincial dialect. One French newspaper says that the type of French spoken by some of the announcers would shame even an Englishman.

Gaiety Returns to Vienna

AN interesting game of Hide and Seek is being played between the Viennese police and an illegal wireless transmitter. This station apparently belongs to one of the banned political parties and pumps out propaganda at various times. So far all the efforts of the police with direction finders have proved fruitless, and owing to the different number of bearings obtained it is now believed that the transmitter is a portable one. The police have been handicapped by several practical jokers who have apparently set their broadcasting receivers into oscillation and put an ordinary telephone-type microphone in series with the aerial, thus forming quite an effective short-wave transmitter sufficient to lead the police "up the garden" with fictitious messages. These jokes have become so troublesome that it may eventually lead to the banning of reaction receivers.

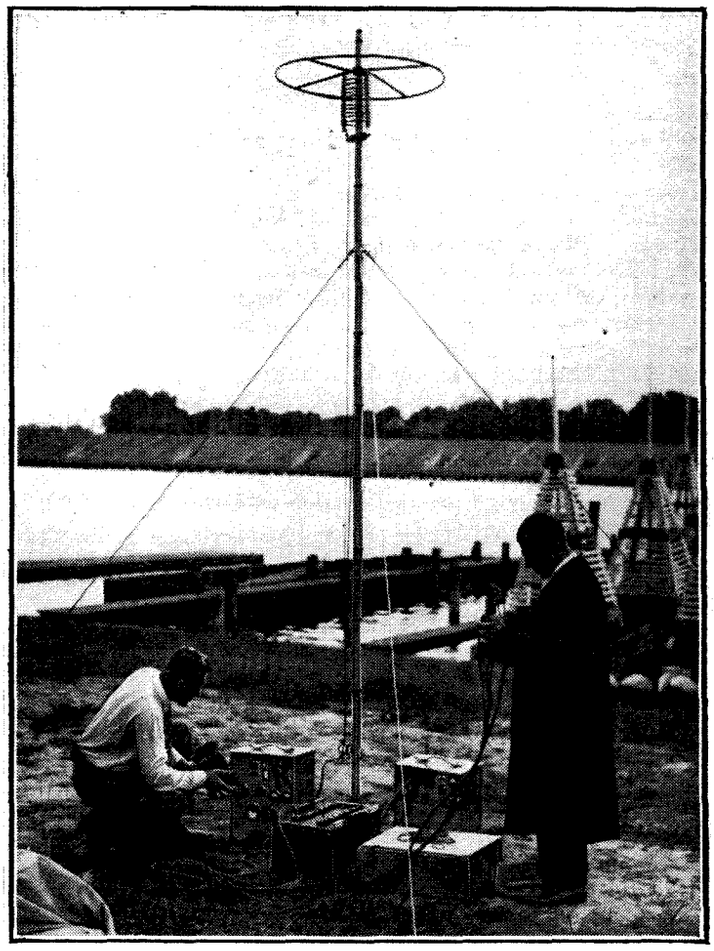

Making preliminary tests with the portable short-wave transmitting equipment that will be used to relay the running commentaries on the international regatta at the forthcoming Olympic Games in Germany.

N.R.E.A.

ON July 30th next, at 8.15 p.m., the National Radio Engineers' Association are holding a rally and presentation at the Howard Room, Y.M.C.A., Russell Street, Tottenham Court Road, W.C.2, when a lecture will be given by Mr. Nixon, of the G.E.C., on the technical aspect of valve servicing. It will be illustrated by cinema film.

Fellowship certificates are to be presented, and all interested wireless engineers are invited.

Further particulars can be obtained from Mr. Howard Morgan, Radiohouse, 172, Garratt Lane, Wandsworth, London, S.W.18.

Television Wavelengths

IT is now known that the B.B.C. television transmissions will employ the following frequencies: Sound, 41.5 mc/s, 7.23 metres; vision, 45 mc/s, 6.66 metres. The power of the respective transmissions will be 3 kW. and 17 kW.

Miscellaneous Advertisements

AUGUST Bank Holiday will necessitate earlier press arrangements for the issue of *The Wireless World* of August 7th, and Miscellaneous Advertisements intended for that issue will close with those received by first post on Friday, July 31st.

"For This Relief, Much Thanks"

MANY complaints have been made by listeners about the excessive interference caused to broadcasting by certain types of electrical apparatus, and it is a relief to hear of the strong view as to the necessity for legislation expressed in the Report of the I.E.E. Committee just issued. What is an equally great relief, however, is to find that certain energetic local government bodies are at last waking up to the annoyance and distress caused by loud speakers being operated in gardens and outside shop premises. The County Council of the West Riding of Yorkshire have passed bylaws against this practice. These laws provide for the issue of a summons if action is not taken to abate the nuisance after fourteen days' notice has been given by three neighbours. Unfortunately, however, the penalty provided is only a £5 fine, which seems all too little to meet the case.

Amateur Transmitters: Reports Wanted

MR. E. W. G. SAINTY, G6ST, of 23, Albert Road, Witham, Essex, who is now working on 1,746 kc/s and 7,046 kc/s would appreciate and acknowledge reports from listeners.

Mr. W. Crossland, 2BUC, of 13, Queen's Road, Whitstable, Kent, asks for reports to be sent of reception of G2OL on August 2nd and 3rd. The station will be transmitting telephony and I.C.W. every alternate ten minutes between 10.00 and 13.00 B.S.T. on the dates mentioned. The frequency used will be 57,200 kc/s.

CLUB NEWS

Wirral Amateur Transmitting and Short-Wave Club

A very interesting lecture entitled "Radio in the Army" was delivered recently by G2DC. The next meeting will be on July 29th at 7.30 p.m. in King's Square Café, Birkenhead. Full details of the Society can be obtained from the Hon. Secretary at "Colby," Irby Road, Heswall, Wirral, Cheshire.

Dutch Field Day

The Dutch Amateur Radio Society V.U.K.A. is holding a field day on Sunday (July 26th) when an 80-watt 5-metre transmitter will be operated from the top of a tall tower. Reception reports from England are specially invited. They should be sent c/o Amroh, Muiden, Holland. British amateurs on holiday in Holland will receive an enthusiastic welcome from the Society.

The Walthamstow and District Radio Society

A very interesting lecture and demonstration was recently given at the headquarters of the Society by G5VY, the subject being "Ultra-high-frequency Work." Several types of apparatus were demonstrated, special interest being shown in a 5- and 2½-metre transmitter, both being absolutely stable without the aid of crystal control. Full details of the Society can be obtained from the Hon. Secretary at 2, Station Road, E.17.

Murphy B23

AN ECONOMICAL BATTERY RECEIVER OF HIGH-GRADE DESIGN AND FINISH

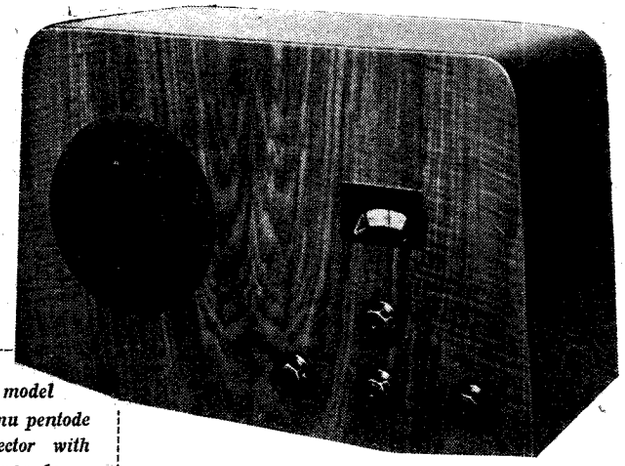

ALTHOUGH its price is low, this receiver has all the good qualities of robust design and clean workmanship which characterise the more expensive receivers in the Murphy range. Many of the components, including the coil assemblies, are, in fact, identical with those used in the "30" and "28" series.

A "straight" circuit, consisting of an HF amplifier, detector, and pentode output valve, has been adopted in preference to a superheterodyne, as it was felt that a better all-round performance would be provided by a well-executed "straight" circuit than by a superheterodyne which had been pared down to bring it within the price level decided upon. No batteries are supplied with the receiver, but the non-technical user will have no difficulty in supplying and connecting these for himself. There is no grid bias battery to worry about, and only two connections are necessary to the HT battery, intermediate tappings having been eliminated by the choice of suitable resistances in the circuit to combine the functions of decoupling and voltage reduction to the earlier stages in the set.

The good humour which this simplification of the external leads will have engendered by the time the receiver is ready for use will not evaporate when the tyro switches on and tries to receive his first station. Of the many battery sets which we have tested, few have equalled the B23 in their docility of performance in unskilled hands. The majority of battery receivers, in which reaction must of necessity be employed to supplement the range and selectivity, are inclined to be short of temper and to vent their displeasure in loud and unpleasant noises from the loud speaker at the slightest suggestion of mishandling. In the B23, on the other hand, matters have been so arranged that it appears to be virtually impossible to produce distorted reproduction, so that the beginner can be sure of at least tolerable entertainment from his local station during the period of his novitiate.

FEATURES.—***Type.***—*Table model battery receiver.* ***Circuit.***—*Var.-mu pentode HF amplifier—triode grid detector with reaction—pentode output valve.* ***Controls.***—*(1) Tuning. (2) Volume and on-off switch. (3) Reaction. (4) Waverange.* ***Price.***—*(without batteries) £6 7s. 6d.* ***Makers.***—*Murphy Radio Ltd., Broadwater Road, Welwyn Garden City.*

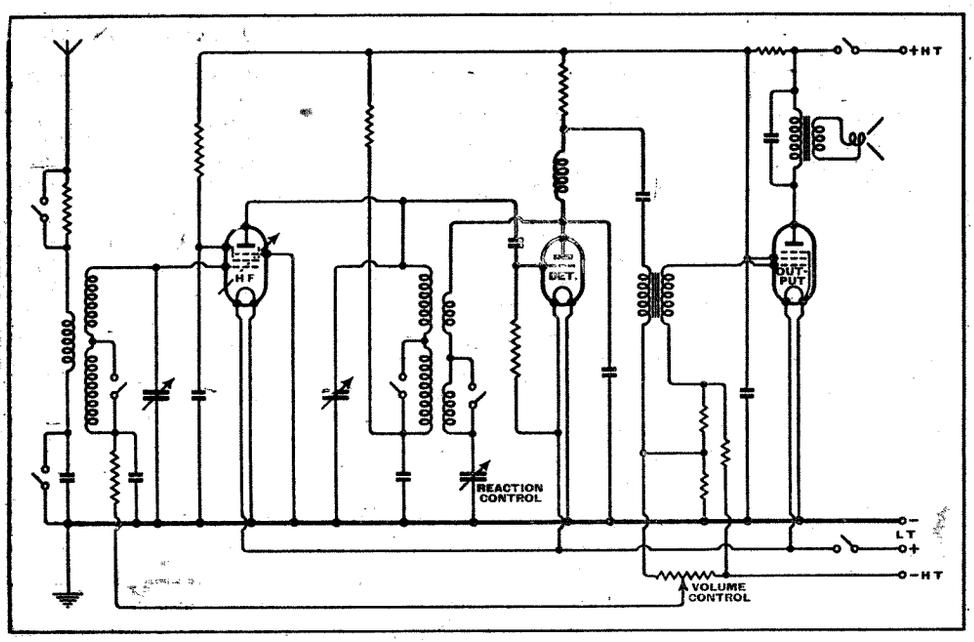

A notable feature of the circuit is the method of obtaining automatic grid bias without loss of amplification due to anti-phase feed-back.

As his skill increases he will discover that the set is capable of a performance in the matter of range, if not in selectivity, which is comparable with a superheterodyne. Whether this range can be used to bring in the number of stations which it promises must depend upon the distance at which the set is installed from the nearest B.B.C. station. With only two tuned circuits, even though these are well designed and supplemented by reaction, it is unreasonable to expect the selectivity which can be obtained with an intermediate amplifier incorporating two band-pass filters, such as one finds in the cheapest of superhets. As an indication of the performance which is to be expected in the matter of selectivity, it can be stated that, with the reaction and volume controls adjusted to give what we regard as the best balance between selectivity and sensitivity, the spread of the Brookmans Park transmitters when using the set in Central London was from 245-272 metres in the case of the National, and 315-375 in the case of the Regional. On long waves a little reaction is necessary to separate Radio-Paris from Droitwich, but the volume control will probably have to be turned down to compensate for the increase of signal strength.

Natural Quality

The permanent-magnet moving-coil loud speaker gives unobtrusively good quality of reproduction with just enough suggestion of bass response to preserve the musical significance of orchestral compositions, but without the booming bass which is so often used to give a false sense of efficiency and "big set" performance. Similarly, at the top end of the musical scale the designers have succeeded in extending the response sufficiently high to give clarity without paying the price of harshness due to an over-emphasis of the output in the region of 2,000-3,000 cycles. The volume will be found quite adequate for the average living room, but at first the uncritical may come to a false conclusion on this score because the set appears to make less "noise" than many others of similar specification.

In designing the circuit every care has been taken to extract the highest possible degree of efficiency and selectivity from the two tuned circuits. The tuned input circuit to the first valve is coupled to the aerial through a coil of fairly high inductance which is designed to resonate with the aerial capacity at some wavelength above the top of the medium waveband.

Murphy B23—

The circuit constants have been adjusted so that the set gives the best intrinsic selectivity with an aerial of 90 or 100ft. To preserve the optimum coupling conditions on long as well as medium waves, a small condenser is included in series with the aerial coupling coil on long waves. The set is provided with a well-graded volume control, and, to provide an adequate minimum when receiving the local station, a resistance has been included in series with the aerial, which can be brought into circuit by means of the "local-distance" switch at the back of the chassis.

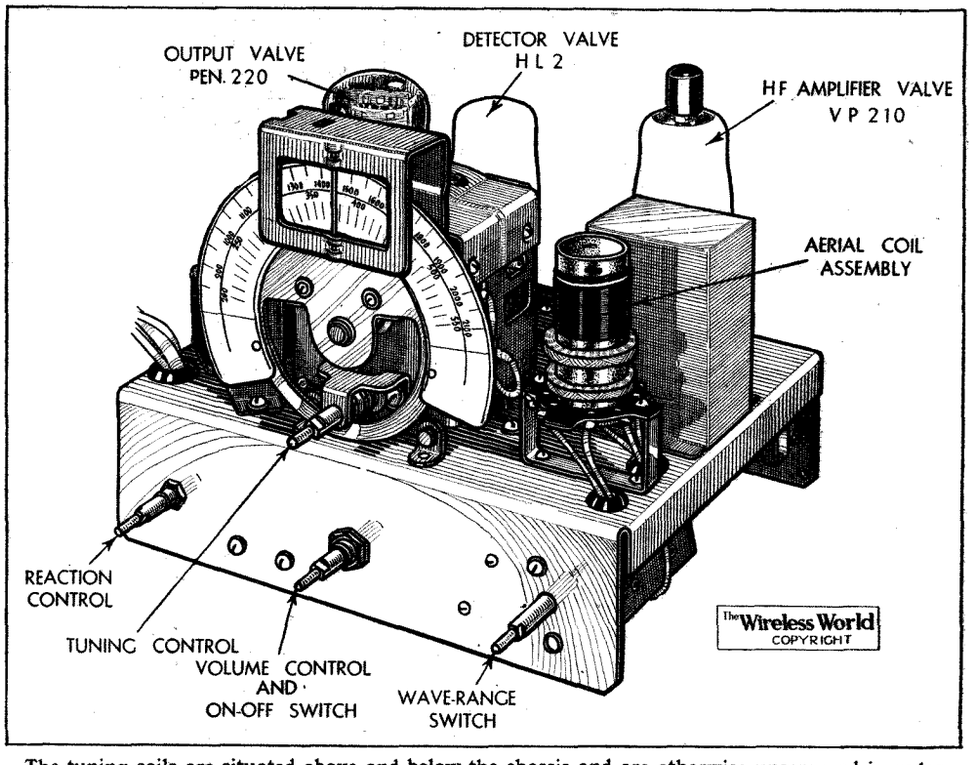

The tuning coils are situated above and below the chassis and are otherwise unscreened in order to preserve the highest possible degree of selectivity.

The HF amplifier valve is a variable-mu pentode which is tuned-anode coupled to the triode grid detector. Reaction is applied through the usual capacity controlled fixed coupling coils, and it holds its setting remarkably well over the full range of the tuning dial. The rectified output from the anode of the detector passes through an HF filter and is then resistance-capacity coupled to a step-up transformer in the input circuit to the pentode output valve. The bias for this valve is derived from a potential divider in the negative return to the HT battery. Variable bias for volume control in the HF stage is also taken from this resistance through the medium of a shunt potentiometer. Closer examination of this portion of the circuit will reveal that the primary of the inter-valve transformer, instead of being returned to the chassis, is taken to a tapping on the bias resistance. The reason for this is that LF as well as DC currents are circulating in this resistance, and as it is common to both grid and anode circuits of the output valve, there will be some feed-back to the grid in opposite phase to the voltage supplied by the transformer secondary. This would result in considerable loss of amplification, and it is to overcome this effect that the primary is supplied with a compensating voltage in the appropriate phase. The HT supplied to the detector and HF valves is decoupled to prevent instability which might be caused by the high resistance which the HT battery acquires towards the end of its life.

A milliammeter in the positive HT lead showed the total current consumption of the set to be from 6.3 to 6.8 mA. with an HT voltage of 115. The variation of HT consumption with the setting of the volume and reaction controls does not amount to more than 0.5 mA., and even on the loudest signals there is no more than a tremor in the meter needle, indicating that matters have been so arranged that serious overloading of the output valve cannot take place.

The cabinet, with its flush-fitting loud speaker grille, conforms to the convention of severe simplicity which is characteristic of all current Murphy designs. The base line of the cabinet is raised at each end, and this provides a convenient hold for lifting the set. The tuning scale is calibrated in wavelengths, but there are no station names. The set is, however, sent out with a well-prepared list of the principal broadcasting stations arranged alphabetically and also in order of wavelength. No dial lamp is fitted, but provision is made for the addition of this refinement for those who are prepared to provide for the extra consumption of LT current.

To summarise, the Murphy B23 is, from every point of view, a high-grade product —to use the makers' apt description, "a good set made cheaply." While it has a high intrinsic performance for the number of tuned circuits and valves employed, it is at the same time a set which is less dependent on skilful handling for the reception of the B.B.C. programmes than the majority of battery receivers employing reaction.

NEW DIRECTIONAL MICROPHONE

From Our Berlin Correspondent

THE engineering department of the German Broadcasting Company has recently completed the design of an entirely new type of condenser microphone. The new instrument is termed, in Germany, a "Directional Capacity Microphone." Briefly, there are two types, one with directional characteristics resembling the figure 8 and the second with characteristics in the shape of a heart; in the fact, the "polar diagrams" of response are reminiscent of those usually associated with radio direction finders.

The main advantage of the new type of microphone is its entire independence of frequency with regard to its directional properties. With many types of microphone the directional characteristics vary with the frequency, but it is claimed the new RRG microphone has the same directional properties at all frequencies.

The new condenser microphone is highly directional, and can be effectively used at a considerable distance from the source of sound.

The "figure of 8" microphone achieves its peculiar polar diagram by the fact that the electrode behind the membrane is pierced by holes. For the microphone with the heart-shaped characteristic two membranes are used, only one of which is connected. The electrode is in the centre of the two membranes and has a number of holes, some of which go right through and others only in part.

Lamps for Volume Expansion

We have received from A. Hinderlich, 2, Bridge Road, London, N.W.10, a list of lamps suitable for the bridge system of volume expansion recently described in these pages. The average resistance of the lamps when cold and with various values of current is given in tabular form.

Listeners' Guid

Outstanding Broa

VIMY RIDGE. An impressive view of the Canadian War Memorial which will be unveiled by His Majesty the King on Sunday.

THE ceremony of the unveiling by His Majesty King Edward VIII of the Canadian War Memorial at Vimy Ridge in the presence of the President of the French Republic will be broadcast in the National programme from 2.25 to 3.30 on Sunday. The event marks the consummation of a project which has taken over ten years to complete. There are nearly 12,000 names on the base of the Memorial, which is dedicated to the Canadian missing who have no known graves. The most striking feature of the memorial consists of two pylons each over 140ft. high, one of which is dedicated to the French armies and the other to the armies of Canada. These make a spectacle of the utmost impressiveness dominating the landscape for many miles around Vimy Ridge. The actual ceremony by His Majesty will take the form of the unveiling of a figure at the base of this huge Memorial. The proceedings will also be broadcast by Paris PTT.

MALVERN

THE feature programme by Robin Whitworth to-night at 8 (Reg.) will serve as a background to the Malvern Dramatic Festival which opens to-morrow, July 25th. The mobile recording van having visited many of the remote homes in the hills, old residents will be heard telling of the changes they have seen. The programme will review Malvern's history from the time of the foundation of its Priory to the present day.

ALLEYNE AND LEONHARDT

THESE two well-known solo pianists will be heard playing special arrangements of popular works in a double piano act to-night at 10.20 (Nat.). In this, their first dual broadcast, they will be heard with the Theatre Orchestra conducted by Reginald Burston.

MAX

"A SMALL BOY SEEING GIANTS" is the title of the twenty-five minute talk to be given by Max Beerbohm from the National transmitter at 9.5 on Sunday. He will undoubtedly give some amusing and clever word caricatures in his own inimitable style.

BRITISH COMIC OPERA

IT is the aim of Gordon McConnel in his comic opera programme on Monday at 8 (Nat.) and Wednesday 6.30 (Nat. and Reg.) to knit together by explanatory announcements the songs and scenas from three well-known British comic operas. His choice in this, the sixth of the series, will be "Derby Day," "The Pride of the Regiment" and "San Toy." The Revue Chorus and Theatre Orchestra will be conducted by Mark H. Lubbock, and among the artists taking part will be Stuart Robertson, Tessa Deane, Wynne Ajello and Horace Percival.

ANCIENT MONUMENTS

THE recently appointed Secretary of State for the Colonies, the Rt. Hon. W. G. A. Ormsby-Gore, will give a talk on Thursday in the National programme at 8 with the above somewhat uninspiring title. He has considerable experience in the care and preservation of National relics of the past, for he was, from 1931 until he took over his present office, First Commissioner of Works and he will, therefore, undoubtedly have some very interesting information to pass on to the man-in-the-street.

GOLF

MANY will know George Nash through his contributions "Letters to the Secretary of a Golf Club" in *Punch*. An episode based on these letters entitled "Mr. Whelk in the Rough" will be broadcast in the Regional programme on Wednesday at 9.

MATCHES

ON Saturday afternoon three places will be visited between 2.30 and 5.15 (Nat.) where matches are being played. At Wimbledon the Challenge Round for the Davis Cup will be in progress. From Old Trafford the second Test Match between England and All-India will be commented upon. Contrasting with the Test Match will be the village cricket match between Tilford and The Bourne on the village green at Tilford in Surrey, where T. Woodrooffe will give a commentary from the roof of the Barley Mow Inn, which overlooks the Green. The microphone will be switched in and out at these three events giving listeners the most exciting happenings at various times.

POET AND TENT-MAKER

"THE THREE FRIENDS" is an imaginative chronicle of certain events in the life of Omar Khayyám, poet and tent-maker, which was first broadcast nearly two years ago. It was specially written for broadcasting by Dewan Sherar, and will be revived at 8.40 on Tuesday (Nat.) and at the same time on Thursday

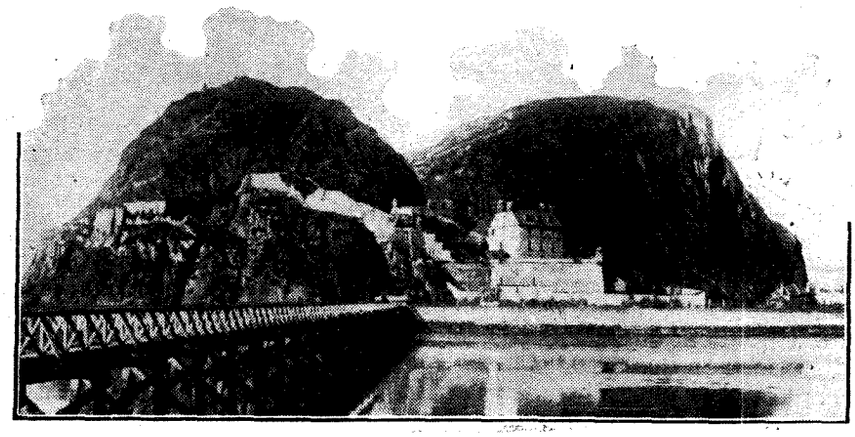

DUMBARTON CASTLE. A reminiscence of days long past by Dr. W. Mackay Mackenzie will be broadcast from the Castle Regionally at 8 on Tuesday.

e for the Week

casts at Home and Abroad

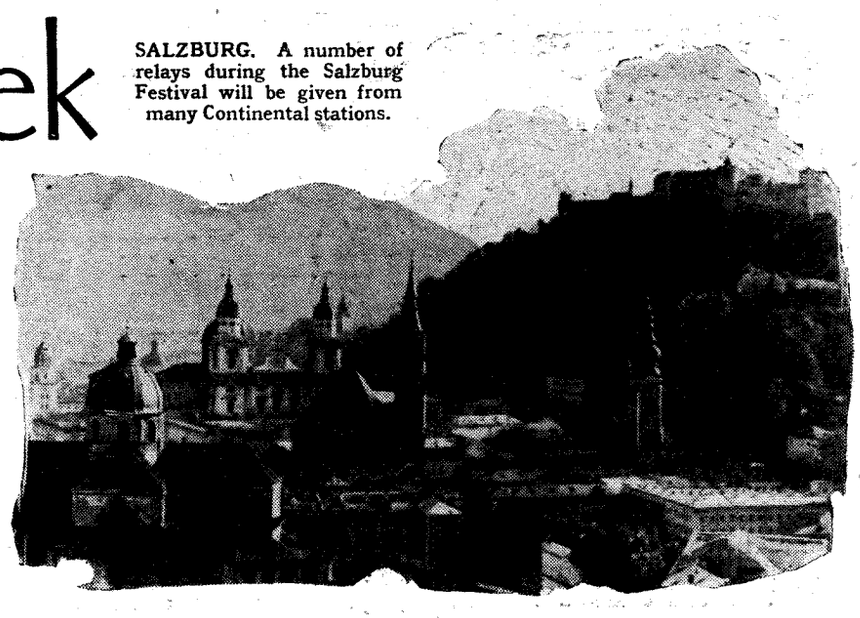

SALZBURG. A number of relays during the Salzburg Festival will be given from many Continental stations.

(Reg.). The producer will be Lance Sieveking and the narrator Robert Harris. Norman Shelley will take the part of Omar.

ONE CROWDED HOUR

RONALD FRANKAU described his musical review, "You Ought to See Us," as fast-moving entertainment, as topical as convention will allow and with as many changes as can be crowded into one hour. The title has something to do with the presentation, as Frankau proposes to describe to listeners the scenes and players. This will give him plenty of scope for innumerable witticisms. With him in the cast will be his wife (Rene Robertson), Tommy Handley and Mrs. Handley (Jean Allistone), Robert Algar, Grace Vivian Russell and Dorothy Kay. This Frankau revue will be broadcast on Wednesday at 8 (Reg.) and again on Friday, July 31st (Nat.).

"YOU OUGHT TO SEE US." From left to right in this group can be seen Mrs. Ronald Frankau, Tommy Handley, Mrs. Tommy Handley and Ronald Frankau, who will be appearing in this Frankau musical revue.

GRETA KELLER

THIS famous international radio star will be giving a half-hour concert on Thursday at 8 from the Norwegian stations during her stay in Oslo.

SALZBURG FESTIVAL

THIS week's opera programme is graced by one outstanding event of international importance. This is Mozart's "Don Giovanni" which Vienna and most European stations are relaying from the Salzburg Festival Theatre at 7 on Tuesday. Bruno Walter will be conducting the Vienna Philharmonic Orchestra. Mozart was a native of Salzburg, and the performance of his operas originated the Summer Musical Festival.

From Post Parisien at 9 on Tuesday comes Puccini's "Madame Butterfly" from the Casino, Knocke. This little Belgian seaside resort is becoming famous for its first-class concerts and fine presentation of popular opera.

Radio Paris is relaying at 8.45 on Tuesday "L'incoronazione di Poppea," the opera on which Monteverdi's fame principally rests.

BRITISH FOLK TUNES

A NEW series of broadcasts under the above heading is to be broadcast from the Norwegian stations. The first will be given to-night at 8.35, when Old English and Scots songs from the 16th and 18th centuries will be featured with the Scottish singer Elen McElwee.

Scottish tunes and dances are also featured in a programme of ancient Danish folk dances to be broadcast on Sunday at 8 from Otterup.

A POPULAR COMPOSER

A SPECIAL programme of songs by Carl Michael Bellman, whose works have gained popularity far beyond the boundaries of his native Sweden, will be given from the Swedish stations at 9.5 on Sunday.

SUMMER REVUES

FROM the open-air theatre, "Korups Have," in the West End of Copenhagen, will be relayed a revue from 9.30 to 10.45 to-night (Friday) by the Danish stations. Summer revues are becoming a regular broadcast feature in the Danish programmes.

BALLET MUSIC

THE new Deutschlandsender orchestra, which is composed of eighty-six musicians, and is to be increased to 106 during the course of the next few weeks, will give a programme of ballet music at 10.30 on Monday from the Deutschlandsender. This orchestra is to become Germany's representative symphony orchestra for broadcasting.

THE AUDITOR.

HIGHLIGHTS OF THE WEEK

FRIDAY, JULY 24th.

Nat., 8.40, "Good-bye, Mr. Chips." 10.20, B.B.C. Theatre Orchestra with Alleyne and Leonhardt (two pianos).

Reg., 8, "Malvern," a historical impression by Robin Whitworth. ¶Charles Ernesco and his Quintet with Webster Booth.

Abroad.

Hamburg, 8.10, The "Leisure and Recreation" World Congress—folk music of the nations.

SATURDAY, JULY 25th.

Nat., 2.30—5.15, "Matches that Matter," relays from Wimbledon, Old Trafford and Tilford (village cricket). 6.30, Peggy Cochrane. ¶The Scots Military ex-Guardsmen's Band. 8.30, Music Hall.

Reg., 8, London Symphony Orchestra and Kendall Taylor (piano). 9.30, Troise and his Banjoliers.

Abroad.

Paris PTT, 8.15, "La Basoche," three-act opéra-comique (Messager) relayed from Vichy.

SUNDAY, JULY 26th.

Nat., 2.25, His Majesty the King unveils the Canadian War Memorial at Vimy Ridge. ¶Recital: Olga Haley (soprano) and Karl Ulrich Schnabel (piano). 7.55, Service from Whitefield's Tabernacle. ¶Albert Sandler and the Park Lane Hotel Orchestra.

Reg., 6, Iceland Music, relayed from Reykjavik. 7.55, Service from St. Sepulchre's, Holborn, with the Choir of the School of English Church Music. 9.5, Max Beerbohm. ¶Orchestral and vocal music of 1300–1700.

Abroad.

Vienna, 8.35, Salzburg Festival, concert from Salzburg Cathedral.

MONDAY, JULY 27th.

Nat., 7, 4th Anniversary of "Gaffer and Gavotte." 8, Songs and Scenas from three British comic operas.

Reg., 8, The Eton College Choir from Eton College Chapel. ¶B.B.C. Dance Orchestra.

Abroad.

Berlin, 8.10, "At the Sea"—great dance evening.

TUESDAY, JULY 28th.

Nat., 7, Claude Hulbert and Bobbie Comber. 8.40, "The Three Friends," Omar Khayyám programme. 10, Anne Thursfield (mezzo-soprano).

Reg., 8, The Castle of Dumbarton. 8.40, Ballet music—Sadler's Wells Orchestra.

Abroad.

Post Parisien, 9, "Madame Butterfly," from the Casino, Knocke.

WEDNESDAY, JULY 29th.

Nat., 6.30, Songs and Scenas from three British comic operas. ¶The Aristocrats of Harmony. 10, Audrey Hyslop in a Mrs. Tactless Episode.

Reg., 8, "You Ought to See Us." ¶"Mr. Whelk in the Rough."

Abroad.

Kalundborg, 9.35, Negro Spirituals.

THURSDAY, JULY 30th.

Nat., 8, "Ancient Monuments," the Rt. Hon. W. G. A. Ormsby-Gore. ¶Schubert Recital by Katharine Goodson (piano). 8.40, "At Home," Sydney Baynes and his Band with Helen McKay.

Reg., 8.40, "The Three Friends." 9.30, B.B.C. Theatre Orchestra.

Abroad.

Radio-Paris, 8.45, Symphony Concert by the National Orchestra and Raugel Choir.

UNBIASED

By FREE GRID

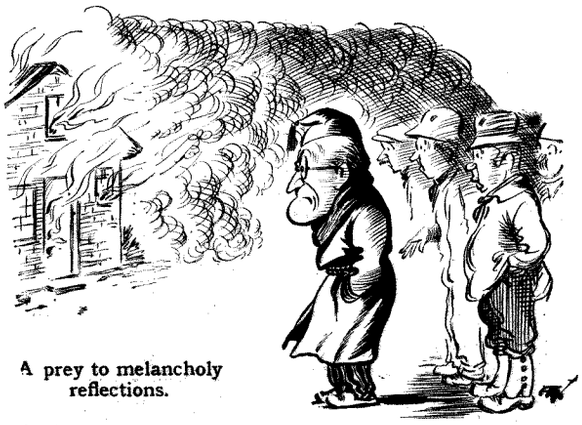

A prey to melancholy reflections.

Supernatural Occurrences

I WAS extremely interested to read the other day about the behaviour of the natives in Rhodesia who suddenly heard a cool, calm and collected voice issuing from the heart of an inferno which had resulted from the accidental overturning of a lamp in a house built of a particularly inflammable type of material. The voice was that of Henry Hall, and it appeared that in some mysterious manner the fire had turned on the short-wave wireless set inside the house. There was no mystery concerning the reason for Henry Hall being heard, since the set happened to have been tuned to the Daventry Empire station.

Reading of the incident has reminded me of a very similar one which occurred many, many years ago, long before the days of short-wave programmes, or, indeed, of all-mains sets. In this case the scene of the fire was a remote Welsh village at which I was staying in order to recoup my forces after a rather hectic London season.

At the moment when the fire was at its fiercest, and I was standing outside in my night attire amidst the other onlookers, a prey to melancholy reflections, there burst upon our startled ears a clear and resonant voice amid the flames.

Unfortunately, the effect on the simple village folk was startling in the extreme, and one or two of them joined the local temperance society on the spot, and, what is more, paid their subscriptions, which shows the degree of fear with which they were possessed. Broadcast listening, and more especially foreign listening, was not as common as it is to-day, and these good folk were totally unaccustomed to it. The fact that the words, being foreign, were incomprehensible to them merely added to their superstitious fear, and it was not unnatural that some believed that the voice of the Evil One himself was coming from the midst of the flames.

Many possible explanations crossed my mind as to the manner in which the flames had switched on the set, which was of the simple battery type, in which the "on-off" switch merely controlled the LT circuit, the HT battery being always connected up. It would, I thought, have been quite feasible for the heat of the flames to have melted the solder connecting the two wires to the LT switch, so causing them to fall and possibly make contact with each other.

I was considerably startled, however, when I found out on the following day that my accumulator was at the local garage being charged, the proprietor having called for it in accordance with previous orders, and removed it while I slept. For the moment even I was gripped with superstitious fear until the obvious explanation occurred to me, namely, that the terrific heat of the fire underneath the set had been sufficient to cause the valve filaments to emit electrons, so causing the set to function for a few moments until it all perished in the holocaust. This only goes to show how careful we ought to be to exclude all supernatural explanations of apparently inexplicable physical phenomena until we have made quite sure that no simple scientific explanation has been overlooked.

A Solemn Warning

I AM, I regret to say, momentarily *hors de combat* so far as ordinary mundane affairs are concerned owing to severe injuries caused by listening to car radio, although I am managing to dictate these few notes to a nurse at my bedside in the hospital at which I find myself, my object being to warn all of you as soon as possible of the very grave dangers attending the presence of radio in a car. I am definitely not referring to the entirely fictitious dangers supposedly due to the driver having his attention distracted by the programmes. Indeed, so far from this being the case, radio has a beneficial effect insomuch that it keeps the driver from indulging in other activities which might lead him astray.

It so happened that I was out for an early morning spin on my bicycle, a form of exercise which my medical adviser had ordered in an attempt to check my increasing tendency towards adiposity. It was not very long after sunrise, and so, naturally, there was still a considerable stream of cars speeding Londonwards from the many questionable places of amusement which now infest our suburbs. I was considerably astonished to hear the strains of what was obviously car radio coming from the open window of a large limousine and, the hour being what it was, it did not take me long to figure out that the car must be fitted with a short-wave set.

The broadcast was, I found, coming from the short-wave station at Melbourne, it being actually a running commentary on a certain sporting event in that city in which I had a strong financial interest, and which was then in the process of being run off, it being, of course, the afternoon in that part of the world. The finish was a very close one and my excitement arose to fever heat, since I must confess that not only Mrs. Free Grid's new hat but also certain financial commitments of my own depended on the result. As ill-luck would have it, the AVC system of the set semed to fail in its function just as a thrilling neck-and-neck finish was in the course of taking place, and in my efforts to catch the commentator's words I inclined my head until it was almost inside the open window of the car.

I cannot describe very clearly what happened next except that I seemed to have a vivid dream of an elephant kicking me violently on the head, this persisting until I found myself lying on my back looking into the face of a police constable who stood with open notebook expectantly licking the point of his pencil. At first I thought that an assault had been committed upon my person by the occupants of the car who had possibly resented my intrusion, and I said so in no uncertain terms.

It transpired, however, that I was misjudging the people in the car, since what had happened was that in the course of our journey the car and I had reached a section of the road where some foolish borough council, devoid of the least atom of road sense, had chosen to place its high-powered lamp-posts in the middle of the road. It appeared that the car was nearly on the crown of the road and I, being on the off side of it, was completely so, my collision with the lamp-post occurring simultaneously with the finish of the race in far Australia, the result of which, by the way, I have still to learn.

Dictating to a nurse at my bedside.

If any of you happen to have any old magazines you could spare, I should be extremely grateful for them as time hangs rather heavily, this being an old-fashioned type of hospital which was apparently staffed in the days before nurses were trained to apply psycho-therapeutic measures as well as physical ones to those under their care.

New Apparatus Reviewed

Recent Products of the Manufacturers

B.T.S. MINIATURE LF TRANSFORMER

BRITISH TELEVISION SUPPLIES, LTD., Faraday House, 8-10, Charing Cross Road, London, W.C.2, have introduced a miniature LF transformer with a ratio of 1 to 4. As it has an iron core of very high permeability it is advisable to parallel-feed it, for the inductance will fall rapidly if an appreciable amount of DC is passed through the primary.

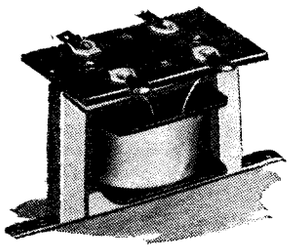

B. T. S. new miniature LF transformer Type TTT.

Used in this manner a primary inductance of 40 henrys is available, which ensures a satisfactory bass response, while the upper register will also be good as its size is so small that there is very little leakage inductance. One milliamp of DC passing through the primary reduced its inductance to 10 henrys.

This is an ideal component for deaf-aid and portable amplifiers, where space is restricted, but its usefulness is not limited to this class of amplifier, and it can be regarded as a general-purpose transformer of the parallel-feed type, which at the price of 5s. 6d. represents good value for money. It is described as the Type TTT.

PA AMPLIFIER AND FEEDER UNIT

WE have also received from British Television Supplies, Ltd., for examination assembled models of the *Wireless World* 12-watt PA amplifier and its feeder unit described in the issues of April 3rd and 10th last.

These two units have been built exactly as specified, apart from the inclusion of a mains transformer and smoothing chokes of their own manufacture. The construction and wiring are very neatly executed, all the components are correctly positioned, and every wire conforms with the published diagrams.

The transformer and chokes they have employed are in every respect satisfactory substitutes and on test we were unable to find any difference between the B.T.S. version and the original model, so we can confidently recommend this PA equipment to all who require it assembled and ready for use.

The amplifier portion, fitted with the specified valves, costs £19 17s. 6d., and the feeder unit, likewise equipped, costs £7 5s. The complete outfit can be obtained assembled in a portable-type carrying case fitted with handles and ventilating grilles for public address work at an inclusive cost of £29 12s. 6d.

HINDERLICH COMPOSITE TRANSFORMER

THE interesting feature of this transformer is that the windings are easily and quickly changed to give any desired ratio, also the air-gap can be just as readily adjusted. The core is built up from "U" and "I" shaped laminations; the former always remain securely clamped to the framework, but the "I" pieces are riveted together to form a solid piece which is removable, and on which the primary and secondary bobbins are assembled. The two bobbins and the removable part of the core are then clamped in position by two screws.

The primary and secondary windings are contained in moulded cases measuring 3¼in. in diameter and $\frac{5}{16}$in. thick, and they are assembled side by side on the core with an earthed screen of copper foil sandwiched between them.

Each coil bobbin is clearly marked with a figure referred to as its "Ratio Index," which is proportional to the number of turns on the coil, and the ratio of the numbers on any pair of coils indicates the transformer ratio obtained with them. Thus number 2 and number 20 coils will give a ratio of 1 to 10. Coils with index numbers of from 0.25 to 20 are normally available, there being 22 different sizes, though special coils can be supplied at short notice.

Hinderlich composite transformer with easily changed coils; showing also a spare bobbin.

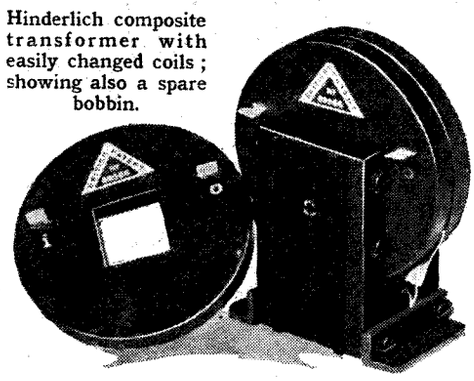

The specimen tested was fitted with Nos. 1 and 15 coils, giving a ratio suitable for a carbon microphone of some 450 ohms if the secondary is shunted by a 100,000-ohm volume control.

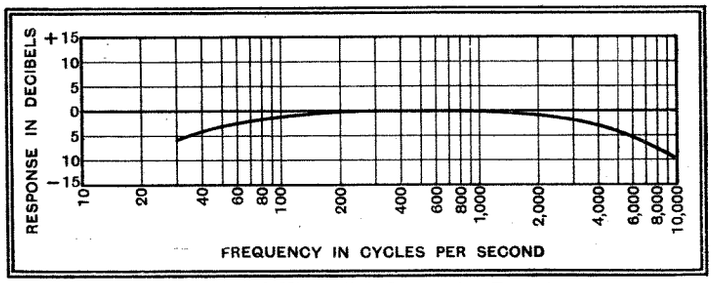

Response curve of Hinderlich Composite Transformer.

Tested as such and with these load resistances, the response curve shown in the graph was obtained. Considering that the particular assembly adopted does not permit of sectionalisation the response at the higher audio frequencies is quite good, while the bass is also satisfactory.

This versatile transformer should be very useful to experimenters, since it enables a large range of ratios to be obtained, and, furthermore, special requirements can be met by obtaining a few additional coils wound for the purpose.

The makers are A. Hinderlich, 2, Bridge Road, Willesden, London, N.W.10, and a transformer suitable for a microphone and with one spare bobbin costs 15s. 6d.

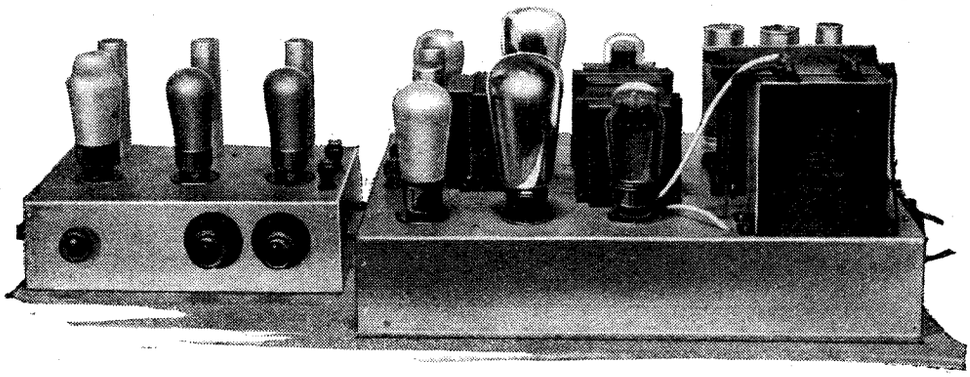

B.T.S. version of the *Wireless World* 12-watt PA amplifier and its feeder unit.

THE "DOWNS" RECORD CHANGER

WE are asked by the manufacturers of this unit to point out that the depth of mechanism underneath the motor board is 10in. and not 18in., as stated in the review on page 36 of the July 10th issue. The overall depth of the mechanism is therefore only 15in. and the dimensions of the motor board are 15in. by 18in.

On the Short Waves

NOTES FROM A LISTENER'S LOG

NEWS is just arriving from the U.S.A. giving details of the extraordinary long-distance working on 56 Mc/s which occurred on the evening of May 9th, 1936.

To quote from QST "Operators out in the middle of the country, peacefully chewing fat with their near neighbours, were then startled to hear the band smeared up (*sic*) with W1's, 2's and 3's. And the peaceful, fat-chewing Easterners, no less startled, found their private band choked up with W9's."

An interesting similarity exists between this particular set of conditions and those which seem to hold in this country for 28 Mc/s working during the summer months.

We have, however, to welcome one or two newcomers, the most unexpected of which is probably Stockholm, on 11.705 Mc/s at the top of the 25-metre band. This station, which has been operating from 5-11 p.m. B.S.T., has given quite a useful signal on most evenings.

On one or two occasions it has been worried by morse interference either from PJS Curaçao or key-clicks from FYR, but on the whole the relays of the Swedish National programme have come over well.

The English announcer, in the afternoons, is our old friend SM5SX, and the 0.5 kW transmitter is situated in the Royal Technical College, Stockholm.

Another station, not really a newcomer, which has been a good signal from midnight onwards recently is PMN, Bandoeng, on 10.26 Mc/s; relaying the NIROM "physical jerks" programme, followed by dance records, Lisbon CSW has also recently appeared between DJN and DJA on 9.55 Mc/s, and many listeners have probably heard the new Moscow transmitter RAN (or RW96) on 9.52 Mc/s between GSB and W2XAF in the early hours of the morning.

Day-to-day conditions during the period under review were as follows: Monday, July 6th, W3XAL was the best signal in the evening, W8XK having been fair early in the evening; later, at 11 p.m., PRF5 would have been good but for boomy quality, and W1XAL at fair on 11.79 Mc/s was rather better than W8XK in the same band.

The Bulgarian station LZA was strong, but with only medium quality at 6.30 p.m. on Tuesday, but only GSO was worth listening to in the 16- and 19-metre bands. Round-the-world echo was noted on GSF at 11 p.m., but not on GSG, and the only really good stations at this time were EAQ and DZA, and possibly DJB.

The best stations late Wednesday, July 8th, were again EAQ, PRF5, and possibly W8XK on 11.87 Mc/s. A large slice of the 19-metre band was taken up by RIM sending pictures.

Conditions were again poor for the distant broadcasters on Thursday, but, on the other hand, the commercials, such as WLA, PPX, LQC, CEA, etc., were simply romping through. The bright spots on Thursday evening, however, were the good signals from LSL on various frequencies, including 21.16 and 15.8 Mc/s, relaying LR5 prior to the special round-the-world programme which this station conducted in the early hours of Friday.

Quite good signals were intercepted from W2XAD between 7 and 8 p.m. on Friday—this seems to have been a special test.

Another of the Bandoeng transmitters, PMA on 19.345 Mc/s, was well received on Saturday afternoon, July 11th, at 1.30 p.m., playing gramophone records during the intervals of speaking to Amsterdam.

The modulation level on PMA, presumably owing to the demands of the multiplex system, was rather low.

Sunday evening saw fair to very poor results from VK2ME on 9.59 Mc/s, but static was very high, and the low level of the announcements made them unintelligible, though music was fairly well received.

The new station in Trujillo City, HI8Q, has been heard on 6.24 Mc/s, and COPQ, Cuba, is working on 9.924 Mc/s.

ETHACOMBER.

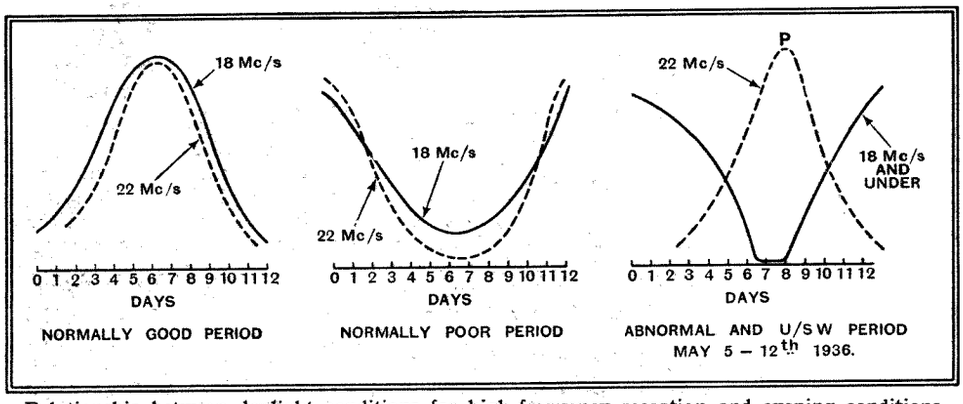

Relationship between daylight conditions for high-frequency reception and evening conditions for long-distance reception on ultra-short waves. The curves show signal-strength fluctuations over periods as indicated. Point P represents a period over which strong indirect-ray signals were received during the evening of May 9th, 1936, at frequencies up to 56 Mc/s.

At the end of the report in QST a statement is made, attributing this temporary increase of range on 56 Mc/s to "unusually heavy sporadic E-region ionisation"—in England we should say "intense E-region," however, instead of "sporadic." In the accompanying graphs I have attempted to show the three average types of day-time short-wave conditions on the higher of the day frequencies—and it will be seen that indirect-ray ultra-high-frequency propagation is generally associated with the third and abnormal condition—a particular case of which occurred from May 5th-12th, with May 9th situated near the centre of the period. This type of condition (Type B?) is generally associated with a considerable or complete reduction in visible sunspot activity.

An explanation of the phenomenon may be that the "normal" solar ionising agent is unable to penetrate down to the intense E-region level when the upper layers are strongly ionised by radiation from active sunspot areas, but is able to do so when there is no sunspot activity. It is assumed, of course, that this ultra-high-frequency propagation *is via* the intense E region, because I am not certain that the "G" region theory has been adequately disposed of yet.

Recent spectrographic studies of the daylight line in the extreme ultra-violet (2,000 Å)—whose variations in intensity seem to correlate with the ionospheric conditions—may help to solve this mystery.

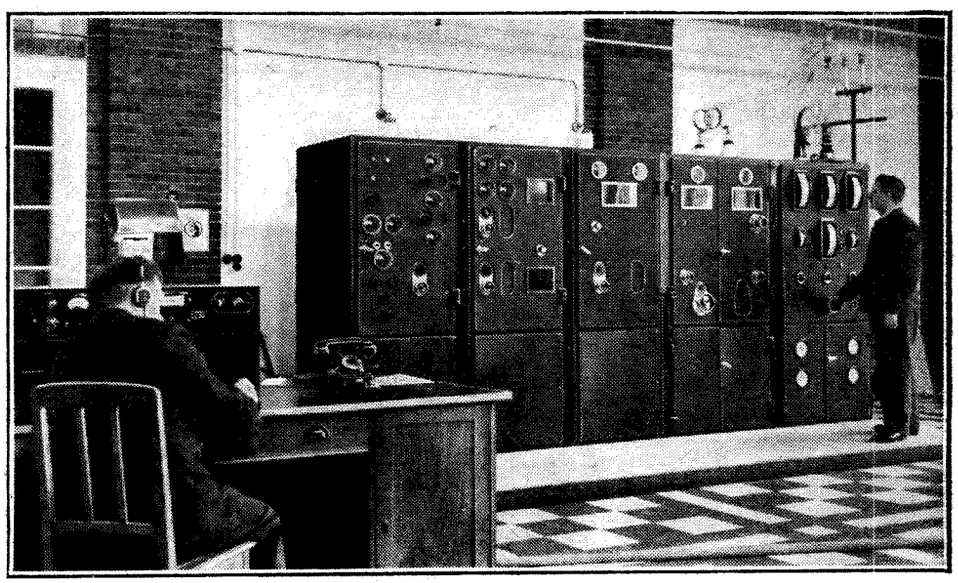

The 50kW Short-wave Transmitter at Nauen. This station, which belongs to the German Post Office and is used for commercial work, will be employed extensively for disseminating news of the forthcoming Olympic Games.

Broadcast Brevities

NEWS FROM PORTLAND PLACE

Children's Hour at Radiolympia

RADIOLYMPIA will have no Henry Hall this year, but the organisers have picked on another broadcasting ensemble to represent the Big House, namely, the London Children's Hour party, which is to appear on the stage for the week from Monday, August 31, to Saturday, September 5.

The Usual "Stars"

On the first-named date a thirty-minute stage-studio production will be broadcast from Olympia as a normal Children's Hour. The programme will include the following: Commander King-Hall, David Seth-Smith (the Zoo Man), Mabel Constanduros and John Rorke, Ronald Gourley, and part of the Children's Hour staff for announcements.

Just Like a Studio

Radiolympia Children's Hour will be staged in a broadcasting studio setting, the size of the studio being approximately 18 feet by 25 feet, with the usual studio equipment and furnishing; in addition, some juvenile tastes may be introduced in the way of friezes and decorative effects suitable to panels.

To Jam or Not to Jam

THE B.B.C. is again being asked whether it contemplates jamming the short-wave propaganda broadcasts of other nations. The answer is, of course, in the negative.

This method of countering the efforts of the opposite camp is never really effective, a fact which was realised during the Great War, when Allies and Germans alike refrained from interfering with each other's wireless. It was recognised that wholesale jamming would simply render wireless useless to both sides.

Duty to Listeners

The same applies to broadcasting to-day. Moreover, the broadcasting organisations of Europe regard it as no part of their duty to their listeners to waste the time and power of a transmitter in jamming.

Dance Music on Sundays

THERE seems to be a demand, which is clamant in some quarters, at any rate, for jazz in the Sunday B.B.C. programmes. It is safe to predict that an increasing amount of *dance music* will be broadcast on Sundays, but not jazz; for the term jazz in this connection is almost as much an anachronism as ragtime.

Rhythm is the urge of the moment, and it is rhythm that the B.B.C. Programme Department intends to provide in more ample measure than in the past.

More Piano Auditions

IN an attempt to ensure that pianos of British manufacture are given the fullest consideration when the time comes to make a fresh selection for use in broadcasting, the B.B.C. has decided not to announce a definite choice as the result of the recent auditions of thirty pianos of various makes, although a fair estimate of their respective merits was obtained. Instead, a further audition will take place in a month's time.

A Changing Situation

It is necessary to review the piano situation for several reasons; the introduction of the ribbon microphone, the reorientation of theories regarding acoustics and other factors have completely changed the situation since a certain type of piano was adopted in Savoy Hill days as the standard type for studio work.

Impartial Tests

The new tests are not to be supervised by the B.B.C. staff alone. The Music Advisory Committee, the Piano Manufacturers' Association and the Federation of British Industries will nominate representatives. An astute move; for if an instrument of foreign manufacture should prove to be the winning entrant, there can be no agitation started against the B.B.C. for its "unpatriotic" action. The piano contract is worth having, as some seventy instruments of different sizes are needed.

That B.B.C. "University"

A WORD regarding the new B.B.C. Training Reserve. Imaginative people of the type who think of a double-diode-triode when they see a flash-lamp bulb already envisage a B.B.C. University which will seriously challenge the somewhat older seats of learning at Oxford and Cambridge.

Apparently they have visions of Henry Hall's Band playing in the quadrangle, what time the soft-footed, begowned tutors from the Variety and Drama Departments pace the cloisters, puzzling out the next lesson.

Quite naturally, then, the question is asked: Where will this new school be situated?

In Portland Place

Let me shatter the dream at once by saying that the Training Reserve, at least in its early days, will probably be conducted in one of the houses adjoining Broadcasting House, in Portland Place. It is even possible that the lectures will be given in the old 30-line television studio.

A Course for Engineers?

One wonders whether the idea of establishing technical refresher courses for engineers would find favour with the powers-that-be in Portland Place. It is a commonplace that any engineer whose work is restricted to a small sphere tends to grow rusty in the wider ramifications of his subject.

A course in modern radio and television methods would probably have a tonic effect on control room and other B.B.C. engineers, giving them renewed zest in their own work, and encouraging a wider and more understanding outlook on the activities of the Corporation as a whole.

The B.B.C. "Television Girls" peep behind the scenes. Mr. D. H. Munro, the Television Production Manager, introduces Miss Elizabeth Cowell and Miss Jasmine Bligh to the programme recording department at Maida Vale.

In North Wales

DURING his recent tour of B.B.C. stations for *The Wireless World*, Leslie Baily told how Sam Jones had been sent to North Wales as resident B.B.C. representative, and how he planned big things from the Bangor studios. We now have news of the practical development of Mr. Jones's schemes.

On August Bank Holiday, Thomas Cox, chief toll collector at the Conway Suspension Bridge, which connects Anglesey to the mainland, will go to the Bangor studio to tell listeners about one of his busiest days of the year.

Mr. Jones has also started a series of "My Day's Work" talks by simple country people. The names of speakers are not divulged until the broadcast. In the last programme a cake-maker and a broom seller from Anglesey, a professional fox-catcher from Snowdonia, and an old quarryman from Bethesda answered questions about their daily work in a most delightful, naïve and unsophisticated manner. On August 8th we shall hear another batch of speakers.

Midland Expansion

MIDLAND Regional headquarters, at Birmingham, overflows its premises again. The studio accommodation is only just adequate, but the offices in the Broad Street building are chaotically overcrowded, so Percy Edgar, the Regional director, has taken extra rooms in Suffolk Street, three minutes' walk away.

The drama, talks, feature programme and children's hour organisers will be exiled to Suffolk Street. It will probably be rather inconvenient to be at a distance from the studios. Ultimately the B.B.C. will have to build a new Broadcasting House at Birmingham.

The Midland music director, Mr. Foster Clarke, leaves in the middle of August. No one has been appointed in his place.

Mr. Martyn Webster, Midland variety director, comes to London for a "refresher" spell at headquarters towards the end of August, Mr. Archie Campbell going up to Birmingham temporarily in exchange.

Recent Inventions

The following abstracts are prepared, with the permission of the Controller of H.M. Stationery Office, from Specifications obtainable at the Patent Office, 25, Southampton Buildings, London, W.C.2, price 1/- each

Brief descriptions of the more interesting radio devices and improvements issued as patents will be included in this section

BROADCAST TRANSMISSION

THE normal distribution of the side-band frequencies radiated by a transmitter is modified with the object of securing the best quality of reproduction consistent with the available ether-space. The carrier wave and one of the side-bands are transmitted in full, and those components of the other side-band that lie close to the carrier frequency are only slightly attenuated. The "outside" frequencies of the second side-band are, however, drastically cut down.

The principle on which the invention is based is that, for good-quality reception, the maximum intensities at treble and top frequencies should be less than those of the middle frequencies; whilst the extreme bass frequencies, although feebler than those in the middle register, should be stronger than the top and treble frequencies. In other words, deep modulation is only required over a limited band (of the order of 200 to 1,500 cycles per second) and not at the higher frequencies.

P. P. Eckersley. Application dates 17th October, 1934 and 17th October, 1935. No. 445431.

o o o o

GENERATING ULTRA-SHORT WAVES

WHEN using a pair of push-pull valves to generate frequencies of the order of 50 to 80 megacycles, care must be taken in the layout of the apparatus in order to avoid unbalanced capacities to earth. Another source of trouble is the lead connecting the valve cathodes, which, owing to its inductance, also tends to reduce the effective "drive" potential applied to the grid.

According to the invention this difficulty is avoided by carrying the cathode leads L, L1 for some distance parallel to the grid leads, before combining them on a single tapping. The arrangement balances out any residual inductance effect.

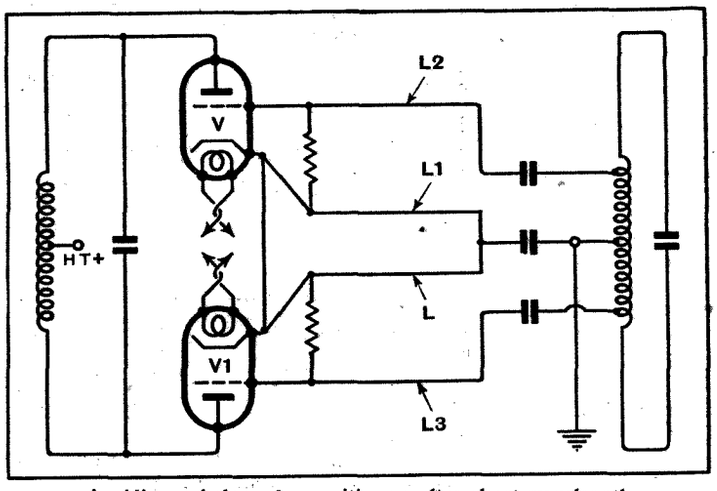

Avoiding unbalanced capacities on ultra-short wavelength.

The two valves V, V1 are connected in push-pull, the anode and grid circuits being similarly tuned and centre-tapped to high-tension and earth respectively. The feeders are arranged as Lecher wires to produce a voltage "loop" at the two grids.

G. W. White and Baird Television, Ltd. Application date December 24th, 1934. No. 445313.

o o o o

MAGNETRON OSCILLATORS

WHEN a magnetron valve of the split-anode type is used to generate ultra-short waves, it is found to be capable of oscillating in two modes, one of which is thought to be due to the presence of rotary space-charges. These are created by the effect of the applied magnetic field, which is normally at right-angles to the electrostatic field across the electrodes. The other mode of oscillation is due to the spiral path taken by the electrons, under the combined influence of the radial and tangential electric fields and the axial magnetic field.

In order to increase the efficiency of such an oscillator, particularly under the second set of conditions, the usual "split" anode is subdivided into an even number of segments, which are connected in pairs at one or both ends. This sets up a standing-wave system along the length of the anode segments, which favours energy transference to the external circuit.

Telefunken Ges für drahtlose Telegraphie m.b.h. Convention date (Germany) August 21st, 1934. No. 445084.

o o o o

SUPERHET SETS.

IN addition to the ordinary local-oscillator valve, a second oscillator is provided for cyclically varying the frequency of the first oscillator. This produces a relatively wide band of intermediate frequencies, from which a selected position of undistorted signal energy is filtered out by a sharply tuned circuit.

A. H. Turner (assignor to Radio Corporation of America). No. 2026759. (U.S.A.)

MUTING CIRCUITS

THE ideal muting circuit should divide all incoming signals into two sharply defined classes:

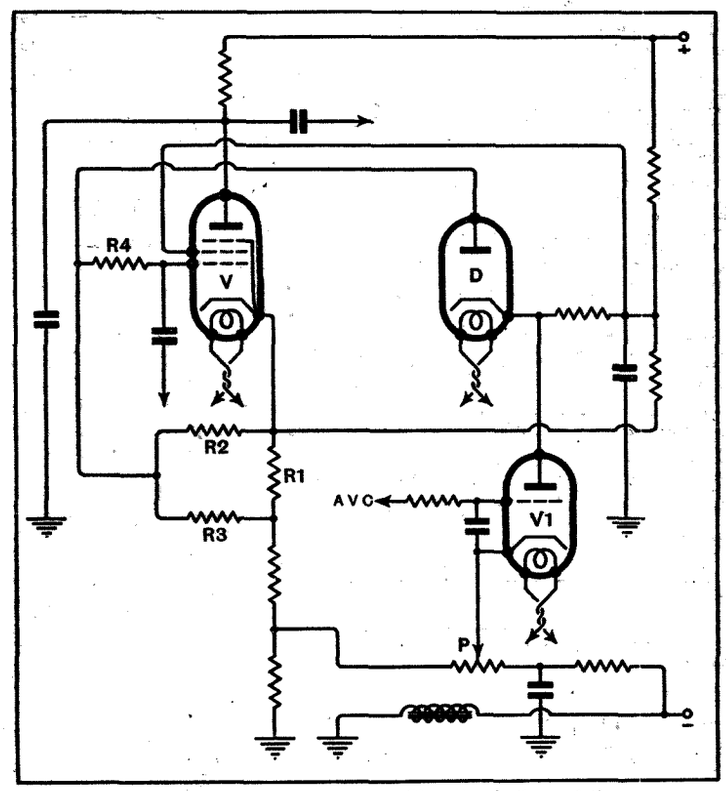

Circuit of the muting system described in Patent No. 444972.

for signals of a strength not worth reproducing the set should be completely insensitive; whilst for signals above a certain threshold value the sensitivity of the set should be equal and independent of any differences in the aerial pick-up. The invention aims to approach this ideal.

The normal muting voltage is applied through resistances R1, R2, R3, R4 to the grid of the LF pentode valve V, and is removed when a worthwhile signal causes a diode D to become non-conductive. The plate of the diode is connected to the resistance R4 and to a point between the resistances R2, R3, and its cathode is connected to the plate of a valve V1 which is controlled by the AVC line.

At a certain low level of signal strength the current through V1 increases to a point where the plate of that valve (and therefore the cathode of D) becomes more negative than the plate of the diode D. The latter then starts to conduct, thereby throwing a negative bias on the grid of the LF pentode sufficient to paralyse that valve and prevent the signal from getting through to the loud speaker. The point of discrimination can be adjusted by varying the tapping point P.

General Electric Co., Ltd., and J. O. Ackroyd. Application date October 30th, 1934. No. 444972.

REACTION CONTROL

IN a receiving set where reaction is used, it is desirable that the point of self-oscillation should always coincide with the same setting of the reaction control, irrespective of the wavelength to which the receiver is tuned.

In order to ensure this, capacity feed-back is used and is applied partly through a circuit which increases the feed-back as the signal frequency rises, and partly through a second circuit which is designed to reduce the feed-back under the same conditions.

N. V. Philips' Gloeilampen-Fabrieken. Convention date (Germany) January 5th, 1935. No. 445098.

o o o o

RADIO BEACONS

A WIRELESS beam, modulated with destructive signals which indicate a definite course to a pilot in the air, is radiated from a group of three dipole aerials. The centre dipole is fixed and is directly energised, whilst the two other dipoles are mounted on each side of it to act as reflectors. The two side aerials are carried on a circular platform which is constantly rotated around the centre dipole, so that the system transmits a rotating "equi-signal" beam along a line where the two different Morse letters, such as A and N, merge into a continuous note.

E. Kramar (assignor to C. Lorenz. Akt). No. 2025212. (U.S.A.)

The Wireless World
THE PRACTICAL RADIO JOURNAL
26th Year of Publication

No. 883. FRIDAY, JULY 31ST, 1936. VOL. XXXIX. No. 5.

Proprietors : ILIFFE & SONS LTD.

Editor :
HUGH S. POCOCK.

Editorial,
Advertising and Publishing Offices :
DORSET HOUSE, STAMFORD STREET,
LONDON, S.E.1.

Telephone: Waterloo 3333 (50 lines).
Telegrams: "Ethaworld, Secist, London."

COVENTRY: Hertford Street.
Telegrams: "Autocar, Coventry." Telephone: 5210 Coventry.

BIRMINGHAM:
Guildhall Buildings, Navigation Street, 2.
Telegrams: "Autopress, Birmingham." Telephone: 2971 Midland (4 lines).

MANCHESTER: 260, Deansgate, 3.
Telegrams: "Iliffe, Manchester." Telephone: Blackfriars 4412 (4 lines).

GLASGOW: 26B, Renfield Street, C.2.
Telegrams: "Iliffe, Glasgow." Telephone: Central 4857.

PUBLISHED WEEKLY. ENTERED AS SECOND CLASS MATTER AT NEW YORK, N.Y.

Subscription Rates :
Home, £1 1s. 8d. ; Canada, £1 1s. 8d. ; other countries, £1 3s. 10d. per annum.

As many of the circuits and apparatus described in these pages are covered by patents, readers are advised, before making use of them, to satisfy themselves that they would not be infringing patents.

CONTENTS

	Page
Editorial Comment	93
The All-Wave Receiver	94
Whither Exhibitions?	96
Radio on Germany's Latest Floating Island	99
How To Avoid Remote Control	100
Current Topics	102
New Apparatus Reviewed	103
The Possibilities of Light Beam Television	104
Listeners' Guide for the Week	106
The Home Laboratory III	108
Broadcast Brevities	111
Random Radiations	112
The All-Wave Super Seven	113
Recent Inventions	114

EDITORIAL COMMENT

Electrical Interference

Support for the I.E.E. Committee's Views

A *COMMENT* by "Diallist" on another page of this issue expressing disappointment that the I.E.E. Committee's Report on Interference does not deal specifically with short wave reception prompts us to make some observations in defence of the Report on this point.

The Report defines what, in the opinion of the Committee, should be regarded as the degree of interference, or rather the ratio of interference to signal which is tolerable in reception. As we explained last week in our summary of the Report, it is not proposed to set out to clear the ether of interference such as could disturb the reception of weak stations when considerable amplification has to be resorted to at the receiver, presumably because the Committee regard the reception of the B.B.C. *programmes* rather than *stations* of any particular wavelength as the first consideration.

Reception on Other Waves

If this object is achieved we do not think that it can fail to have a most beneficial effect on the reception of other stations at greater distances, because where electrical disturbances trouble distant reception it is almost certain that some listeners nearer the source of electrical disturbance will suffer interference on local station reception. When the cure has been effected for local station reception at the source of the trouble, the interference experienced on a distant station may also be expected to disappear.

As regards interference on short waves, we believe that, apart from motor car sources, there is comparatively little interference of this nature which is so tuned to short waves that it would not affect reception on ordinary broadcast bands. Most of the bad electrical interference of the type with which the I.E.E. Committee has been chiefly concerned is of the aperiodic variety spreading widely over the tuning scale.

We believe that if the recommendations of the Report are carried out the elimination of electrical interference will be so thorough that eventually all reception, both local and distant, will be practically cleared of disturbances of this character.

No Slackening Now

Because the I.E.E. Committee has recommended legislation to give the Post Office authority to control the situation, this should not be taken as any reason for a slackening of the present efforts being made by all parties, including listeners themselves, to help rid the ether of noises.

There has been so much goodwill shown in the matter by all descriptions of users of electrical plant, and willingness to help, that it would be a very unfortunate thing indeed if the introduction of legislation were to be looked upon as in the nature of a threat. The purpose of legislation will be to put the matter on a fair footing and to ensure that all apparatus supplied in the future, whether British-made or imported, shall be blameless.

We must not forget, too, that when, as we hope, the recommendations of the Committee are accepted and the Post Office and the Electricity Commissioners collaborate to put them into effect, it is all going to take time before direct results can be obtained.

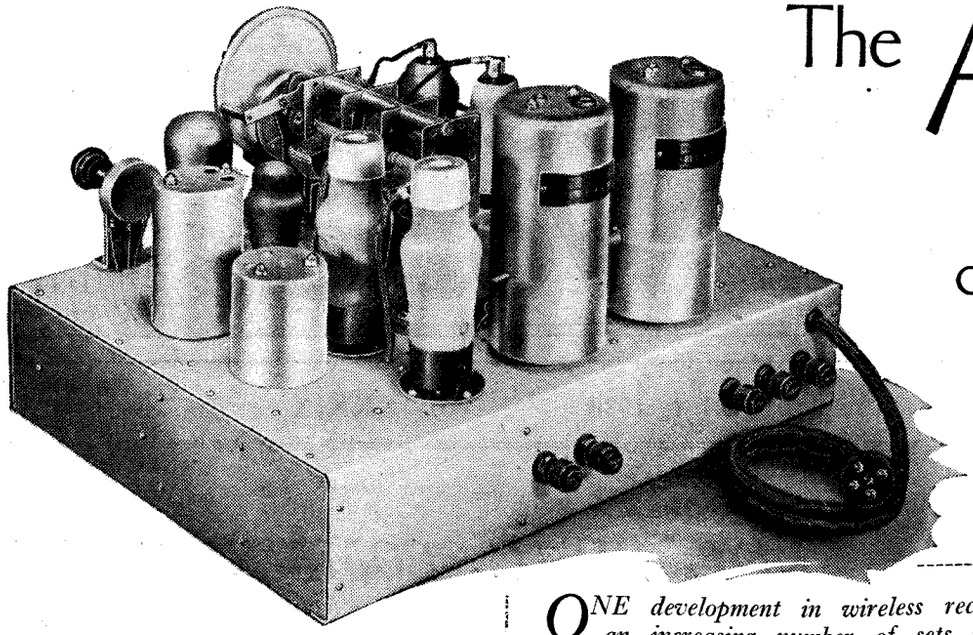

The All-Wave

GENERAL-PURPOSE BROADCAST RECEPTION

ONE development in wireless receivers which is rapidly extending to an increasing number of sets is the addition of short-wave tuning ranges to the usual medium and long wavebands. Some of the difficulties encountered are discussed in this article and the requirements for a good all-wave set are indicated.

SINCE the inception of broadcasting most listeners have been content with receivers covering the medium and long wavebands of 200-550 metres and 1,000-2,000 metres. There is now, however, a growing demand for a wider wavelength range, and the so-called all-wave receivers are growing in popularity. The term all-wave set is really a misnomer, for few, if any, of the sets dignified by this title truly cover all wavelengths used in wireless communication. Even if the term be taken with the narrower meaning of including all broadcast wavelengths, there are few sets which are truly all-wave. As used at present the designation really means only that the tuning range is greater than the medium and long wavebands.

In spite of its lack of precision it is probable that the term will remain, for it is brief, and people are already becoming accustomed to its use. It would be better, however, to adopt a different method of indication, and a rating by the number of bands would seem preferable. The chief reason why receivers are not made to cover all wavelengths is the cost involved. There is a limit to the band of wavelengths which can be covered efficiently in one range, and it is probably impossible to tune from 10 metres to 2,000 metres continuously in fewer than five bands. There will, of course, of necessity be a gap around 460 kc/s when the receiver is a superheterodyne, since the intermediate frequency is usually of this order. Each additional range adds to the cost, for not only are there additional coils to be provided, but trimmers and switch contacts also, while a greater amount of space is required and the difficulties of ganging are increased. The principle of providing no more bands than are necessary is consequently a sound one.

In designing an "all-wave" set, therefore, the designer always tries to cut down the wavelength range to a minimum. The range which must be provided is naturally dictated by the use to which the receiver will be put, and here the requirements vary considerably. To many overseas listeners short waves are a necessity and far more important than the medium and long wavebands. This does not mean that these last are always unimportant in sets intended for overseas use; on the contrary, most of the larger countries have medium-wave broadcasting stations of their own. In few, however, are long wavelengths of much importance.

The Wavelength Range

In this country the medium and long wavebands are predominant, and reception on short wavelengths is a luxury in most cases. This is due chiefly to the lower standard of reception brought about by the severe degree of fading which is often experienced. In spite of this there is a growing interest in such reception, perhaps because its very unreliability adds a spice of excitement.

We can say, therefore, that for general use a receiver must cover in their entirety the medium and long wavebands, and we have only to settle how much of the short wavelengths it must cover to meet the needs of the majority of its users. An examination of the list of short-wave stations will show that the majority lie between 19 metres and 45 metres. The chief American stations, Schenectady, Wayne, Pittsburgh, the German Zeesen transmitters, the Italian Rome and Vatican City, as well as Russian, Dutch, Canadian, Australian and the Empire stations, all fall within this range. It is quite possible to cover a range of this order in a single band, and, indeed, with care it may be extended so that wavelengths between 16 and 50 metres may be received.

A three-band receiver can thus be built covering approximately 16-50 metres, 200-550 metres, and 1,000-2,000 metres, and it can be seen that it will meet the requirements of most listeners in this country and also those of many overseas. It will not, of course, satisfy all overseas requirements, but those listeners who require to make abnormally great use of the short waves will need a set having at least two short-wave bands.

It might be thought that there would be no difficulty in designing a three-band set, and that it would be necessary to provide only the additional coils, trimmers, and extra contacts on the wave-change switch. This is not the case, however, and in practice many difficulties arise. It is customary in ordinary sets to use a tuning condenser of 0.0005 mfd. maximum capacity, and with this to cover the band of 200-550 metres with signal-frequency coils having an inductance of 157 μH. This permits the total stray circuit capacity to be some 70 mmfds., which is quite a large value and one which it is usually easy to keep within.

A tuning capacity of 0.0005 mfd., however, is too large for good results on short wavelengths, for the coil inductance would be so low that the dynamic resistance obtainable from the tuned circuits would not be high enough to permit adequate amplification to be secured. Experience shows that the largest tuning capacity which is practicable for short-wave reception is about 0.00035 mfd. To cover the medium waveband with this smaller tuning capacity involves the reduction of the stray capacities from about 70 mmfds. to about 50 mmfds. and the increase of the coil inductances from 157 μH to some 220-240 μH.

The inclusion of a short-wave band, therefore, necessitates major changes from current practice in the medium and long wavebands, and it is not always easy to

Receiver

By W. T. COCKING

reduce the stray capacities sufficiently. Great care in the choice of layout and type of switch is needed, and even the type of valve employed is not without importance. When considering the short-wave band itself the same precautions are necessary, and, in addition, it is important that none but low-loss insulating materials be employed.

Apart altogether from factors of this nature there is the general design of the receiver to be considered. A superheterodyne is essential, for at the present time it is not possible to secure really high selectivity with a straight set on short wavelengths. In order to keep second-channel interference at a minimum the intermediate frequency must be as high as possible, but it obviously cannot lie within the tuning range of the set. Of the various possibilities a frequency lying between the medium and long wavebands seems the best. With such a frequency, however, at least two signal-frequency tuned circuits are needed to secure reasonable freedom from second-channel interference at the lowest wavelengths. The use of a signal-frequency amplifier is also advisable in order to secure a good signal-to-noise ratio, and two tuned circuits are conveniently associated with such a valve.

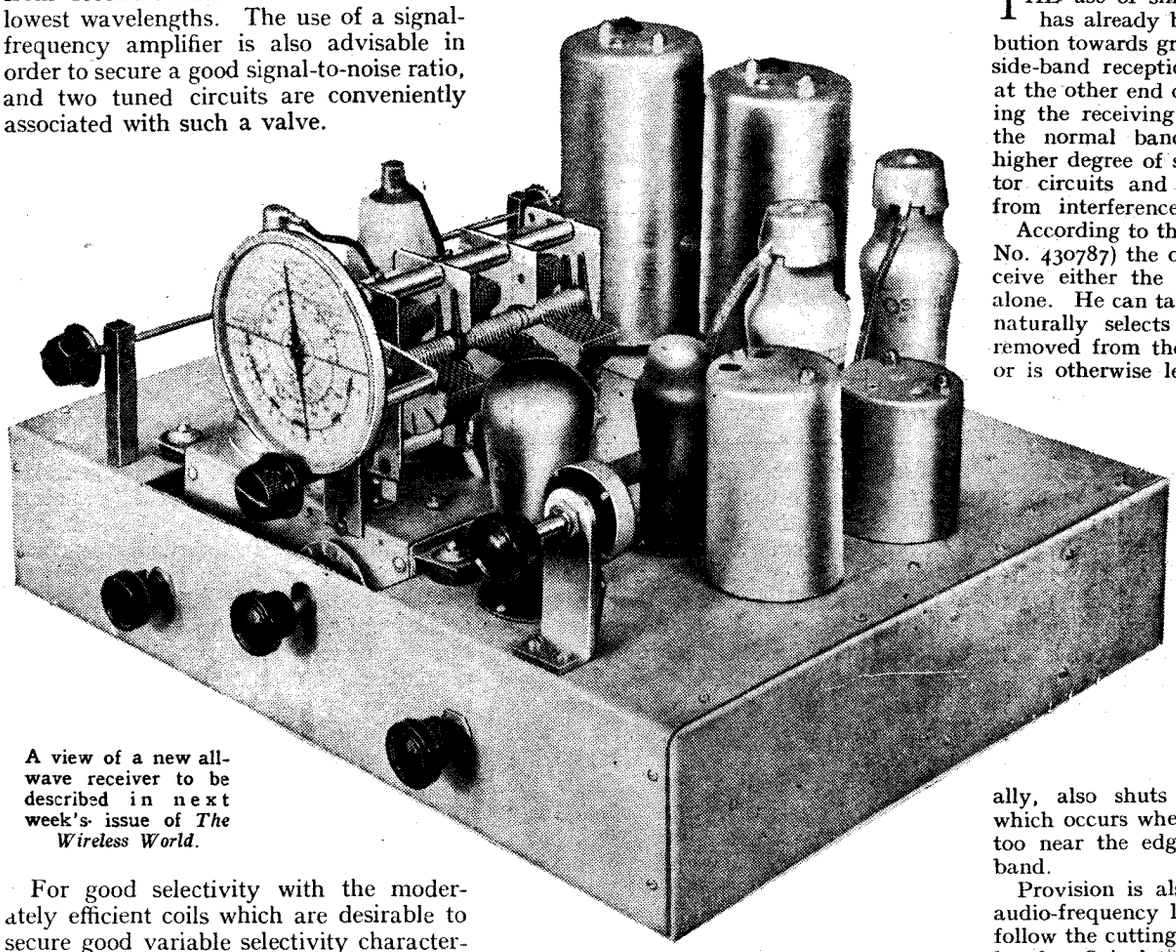

A view of a new all-wave receiver to be described in next week's issue of *The Wireless World*.

For good selectivity with the moderately efficient coils which are desirable to secure good variable selectivity characteristics, six tuned IF circuits are needed, and it is not usually possible to obtain adequate amplification with less than two IF stages. Automatic volume control is also important, and an effective and rapidly acting system is needed for short-wave reception. At the same time, it is important that it should not introduce distortion, for the receiver will undoubtedly be required for high-quality local reception at times. The simplest system which meets the requirements is non-delayed diode AVC, and the objection of lowering the initial sensitivity is most readily countered by including rather more LF amplification than is customary. This has also the advantage of permitting better results when this part of the equipment is used for the reproduction of gramophone records, for even with the less sensitive types of pick-up there will be amplification to spare.

The Circuit Arrangement

In general outline, therefore, it can be seen that a satisfactory type of "all-wave" receiver will have a signal-frequency amplifier, including two tuned circuits capable of covering three bands, a frequency-changer and two IF stages, including six tuned circuits arranged to have good variable-selectivity characteristics, before the detector. The detector will be a diode, and will also provide AVC. The circuits following the detector will naturally depend upon the type of output stage embodied, and where a single triode of the 2.5 watts class is used, one LF valve transformer—coupled to the output stage—provides very satisfactory results indeed.

The receiver which is to be described in next week's issue of *The Wireless World* follows the general lines which have been discussed in this article, and extended tests have shown it to be capable of a very good performance indeed. On medium and long wavebands the performance is in no way inferior to that obtainable from a set including only these bands; the sensitivity and selectivity are adequate for the reception of any worth-while station, and there is a noticeable freedom from whistles. The quality of reproduction reaches an unusually high standard, the signal-to-noise ratio is good, and mains hum is negligible. On short waves also the performance is very pleasing, American stations being well received under normal conditions. Throughout the range the sensitivity is well maintained.

A complete list of the component parts required to build this receiver is printed on page 113.

SINGLE SIDE-BAND TUNING

THE use of single side-band transmission has already been suggested as a contribution towards greater selectivity. In single side-band reception the problem is tackled at the other end of the ether-link by designing the receiving circuits to pass only half the normal band-width, thus ensuring a higher degree of selectivity in the pre-detector circuits and a corresponding freedom from interference.

According to the Hazeltine system (Patent No. 430787) the operator is compelled to receive either the upper or lower side-band alone. He can take his choice of either, and naturally selects the one which is farther removed from the nearest powerful station, or is otherwise less subject to interference. But he cannot tune direct to the carrier-wave—or, in fact, receive satisfactorily on any other setting than the two "optimum" positions already defined. Should he attempt to do so the loud speaker is automatically "muted" by the operation of a selective-admission circuit which throws a cut-off bias on one of the intermediate-frequency valves. This, incidentally, also shuts out the harsh distortion which occurs when the ordinary set is tuned too near the edge of the transmitted side-band.

Provision is also made for offsetting the audio-frequency loss which would normally follow the cutting-out of one of the two side-bands. Calculations show that this amounts to about 6 decibels for a band width of 4 kilocycles. It is made good by inserting a resistance-capacity tone-compensator in the output circuit of the first LF amplifier. An indicator lamp is flashed at each of the critical tuning points.

Whither

RADIOLYMPIA AND ALL THAT

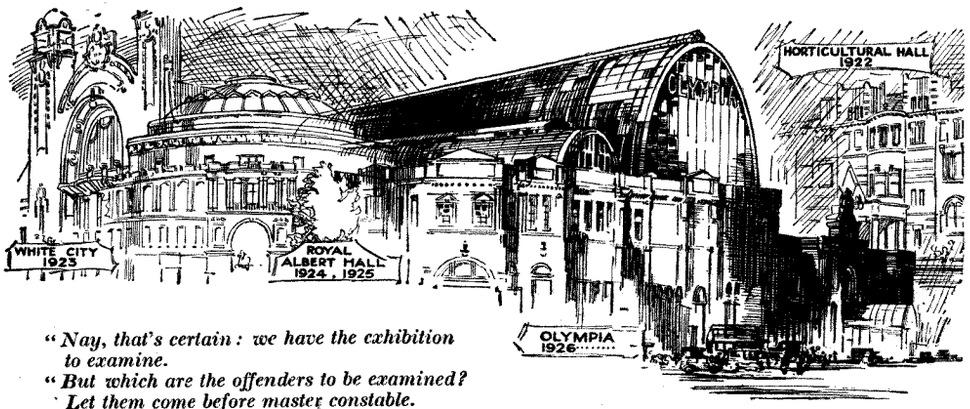

"Nay, that's certain: we have the exhibition to examine.
"But which are the offenders to be examined? Let them come before master constable.
"Yea, marry, let them come before me."

Shakespeare.
Much Ado About Nothing.

MUCH ado about nothing, indeed. Some may think that way, because people are beginning to feel that the Radio Exhibition will soon become a thing of the past; but, if the industry were in a really healthy condition, and if the interest of the public were maintained in technical developments, I do not see how one could envisage the possibility of *not* having an exhibition year after year after year.

A little while ago editorial comment on the change of date of the French Radio Show suggested that our own one is held at the wrong time of year, but, whilst I, as a manufacturer, would greatly prefer a spring show, for the very good reasons given in *The Wireless World*, I do not think that a change of date alone would reflect very favourably on the business side of the industry.

After the last Olympia show *The Wireless World* commented on the lack of technical interest, and this was certainly true, but until the radio industry as a whole puts its house in order I think that exhibitions as we know them are doomed to decline, not only because of absence of technical interest, but because of absence of public interest. If you have to run a side-show in the shape of a theatre displaying "radio stars" to tempt the public in, then there is something radically wrong.

Take the question of absence of technical interest first. The good old days will never come back. You remember how ravenous we all were for the latest hook-ups? In those early days the manufacturer working on a production basis was entirely unknown. Certain firms did exist who made sets for the poor ninnies who knew nothing about the new miracle of "wireless," but we knowing fellows had a healthy contempt for the ready-made set, not, I may add, without justification. Reaction was only allowed if you had an experimenter's licence, and those were difficult to get. As, with the dreadfully designed components then available, stations were even more difficult to coax in, what else should we do than scamper round trying every possible variation of circuit and worrying the lives out of the component manufacturers?

"Wireless" was an all-consuming interest, and fellows who knew the ropes were something akin to gods, and legions hung on their lips. Nowadays, if you are described as a "wireless expert" the only result is to be greeted with, "Oh, I am so glad. Our set hasn't been working well for some time. I can't think what is wrong." If you reply that the local dealer could probably put it right in a few minutes you are instantly excommunicated.

It seems a platitude to say that broadcasting, nowadays, is a public service, and yet the radio industry is perturbed by the thought that we may be reaching saturation simply because it will not realise that broadcasting *is* a public service and nothing else. As this is going ahead of my argument rather too rapidly, I will revert to the question of exhibitions, asking you to bear in mind what I have said —that the days are over when every member of the public was a potential experimenter and that the present-day function of a radio set is to receive broadcasting because of the programme interest of that broadcasting. With this alteration in outlook, it is a natural consequence that a radio exhibition should alter in sympathy; whether it should alter to a sort of second-rate furniture exhibition or not is something altogether different.

HERE is a provocative contribution on the subject of Radio Shows. The author has been given full licence to express his views, many of which may not meet with support from our readers. Nevertheless, this article is both constructive and sincere.

There are three types of exhibitor at Olympia (which exhibition I will deal with in particular, because it was labelled a "national" exhibition and is now the only official survivor). First of all there is the large manufacturer, with an ostentatious factory on an arterial road, who makes tens or hundreds of thousands of sets in a year, and sells quite a number of them. To maintain his dignity and to impress the public, he takes a large stand in the centre of the hall, and as he cannot fill up this aching void with half a dozen "table consoles" at £8 19s. 11¾d. each, he adds some furniture, *houris* and flower gardens, until, very nearly literally, you cannot see the wood for trees. In spite of the wonderful stories which appear in the daily Press about nerve-shattering orders which pour in on the suave attendants, you can assume that, to this type of manufacturer, the exhibition is a dead loss, and the staff is not really suave but merely bored to death. And if you ask why these people go on losing money at Olympia, I can only say that force of habit is one reason, and another is that I only know one manufacturer who has had the courage to say that, if he spent x thousand pounds in going to Olympia to get y thousand pounds' worth of orders, he could depend on getting $y+z$ thousand pounds' worth of orders if he spent the same amount of money on Press advertising, and I don't think the others have the courage to agree with him.

Another type of exhibitor is the component manufacturer, who is most unfortunately situated. The biggest proportion of his output goes to the set maker, and certainly, if the component maker were dependent on the home constructor alone, he would, nowadays, have to close down. The set makers place their contracts long before the show takes place, so that the component manufacturer could quite easily neglect the show altogether; but he dare not do so, because absence usually introduces the time-honoured statement: "Oh, by the way, so-and-so isn't at the show this year; he can't be doing very well." We all know that he is probably doing very well, but the others haven't the courage to stay out, too. So is added to the list of "extortionees" another section of the industry.

The third type includes all the small fry, generally specialists in one thing or another who do not require to sell large numbers of sets and who do quite a large business direct with the public. To these people I think that exhibitions can sometimes be very useful, and enthusiasts love to go along and argue for hours about points that may not be business. It is rather a pity that it is only the unimportant people who might be able to do well, and because they are unimportant in the industry their success or failure does not really mean very much.

So now we come to the very important question of why these radio exhibitions are so disappointing. The reason is clear and probably so obvious that most firms steadfastly refuse to admit the fact. People are simply not buying enough sets to enable the big manufacturer to make a decent profit, and they are not buying

Exhibitions ?

By H. A. HARTLEY

those sets because there is no real reason why they should.

A business house exists solely for one purpose: to make a profit. Provided that the management of the company is sound and that the company is making something which can be sold at a profit, then it is inevitable that that profit will be made. You, dear reader, should get the idea clearly into your head that the only thing which matters is making this profit, and in the case of the radio industry it can fairly be said that the performance of a radio set is of no importance whatever provided the set can be made at a gain and that the performance is of such a standard that the sales department will be successful in persuading a certain number of distributors to buy the output of the factory not only for this year, but for the next and the next after that.

Quality v. Competition

A few years ago there were several large manufacturers who seriously paid attention to the problem of making a radio set emit pleasing sounds. Ever since the beginning of broadcasting, efforts had been made to increase the station-getting properties of receivers, because the idea of "wireless" was—communication at a distance without any apparent connecting medium. *Ergo,* since broadcasting had been invented as a means of transmitting signals to be received by people who did not want to know anything about the Morse code, it was inevitable that the best set was one which got the most stations, and the farther away the station was situated the bigger the thrill.

However, like all new toys, the thrill wore off, and people began to get rather tired of knob twiddling, and got into the habit of listening to their nearest station, because they seemed to get this station's programme with the greatest measure of reliability. The B.B.C. then invented the celebrated regional scheme, whereby listeners might obtain even greater reliability of service, and it might be said that the regional scheme furnished the first incentive for technicians to start facing up to the problem of making radio sets sound sufficiently pleasing to hold the interest of the public and make them buy new sets instead of keeping their antiquated junk.

It might be said that this introduced an era of great technical advance, for not only was the quality of transmissions improved very considerably, but new inventions, producing better speakers, valves, and receivers, were announced at frequent intervals, and a well-designed and well-made set of several years ago was astonishingly good for its day. Advances were continually being made until receivers began to assume the appearance and performance of the present-day sets. Note, in particular, the sets got better every year.

And then something happened which called a halt to progress in technical design. The pages of *The Wireless World* are no place to discuss the economics of radio manufacture and distribution, and it will suffice if I say that intense and somewhat bitter competition between the larger manufacturers resulted in a policy of cutting down the prices of radio sets to an uneconomic level. These sets get any number of foreign stations, and they are advertised as giving "perfect tonal quality," which, *at any price,* is an impossibility. It may not generally be realised, but it is, nevertheless, quite true, that it does not cost much money to get lots of stations, but it is distinctly expensive to achieve high quality of reproduction, and when a manufacturer is faced with the problem of turning out large numbers of sets at a price which makes any attempt at high-fidelity reproduction entirely out of the question, then all he is left with is the achievement of good reception of foreign stations, which can be done at comparatively low cost. Furthermore, since no attempt is made to reproduce a wide musical frequency range, many liberties can be taken with the design which could not be tolerated in more pretentious apparatus.

With the march of time, prices slithered down and down, and, inevitably, sets sounded worse and worse, and now we have the very curious position that the public has been educated into accepting the average price of a radio set to be £10, whereas three years ago a man was quite prepared to spend £15 on his radio. I have never heard that the public thought £15 too much for a set, but simply because one manufacturer sought to steal a march on another, with the other retaliating, and then a few others joining the fight, the public was, if I may say so, "de-educated."

That same public, not being quite so foolish as is generally supposed, found out that new sets, so far from sounding better than their old ones, were sometimes worse, and as the average listener devotes most of his time listening to local programmes, he is going to use a set which deals most faithfully with these, and so the old set is kept in service.

The Coming Show

Which brings us back to the Exhibition, for, as you all know, we are going to have another this year, and it is going to be just like the one we had last year. Let us hope that it will be the last of its kind.

I ought to make it clear that my quarrel does not lie with the organisers, but with the promoters, and the promoters are—the radio industry itself. The organisers are told: "We are going to have an exhibition; kindly see that large numbers of the public attend and pay for admission." The organisers start thinking how they will tempt the public into an exhibition which does not exhibit the essence of what it purports to sell, and hit on the bright idea of attractive side shows. It doesn't really matter what the side shows are so long as they are attractive, and what could be better than showing the public the radio stars that it cannot see at home? I am quite sure that the organisers would introduce fashion parades and coconut shies if they thought that such would attract more visitors.

Well, this year the organisers were told to do their stuff once again, and we are going to have the same old sort of show, with large numbers of all kinds of sets standing mutely on the stands, the public unable to hear what any one of them sounds like. True, in some instances, speakers will work, as of yore, from a common amplifier, which seems able to reduce everything good or bad to a sort of average insipidness which, quite obviously, cannot hold the public attention for one moment.

It may not be realised just how mislead-

Whither Exhibitions?—

ing this common amplifier racket can be. If a broadcast is being taken it can be assumed that about 250 undistorted milliwatts is being put into each speaker, the peaks rising sometimes to about 2 watts. The frequency response of the B.B.C. amplifier is sensibly flat up to 9 or 10,000 cycles, and I know for a fact that the performance of the apparatus is checked at frequent intervals. Now, it is fairly common knowledge that the average cheap set has a pentode output stage of very limited undistorted output. In fact, as the average cheap set is designed in such a way that very little top over about 4,000 cycles reaches the speaker, a fairly large amount of harmonic distortion in the set is not of serious consequence. It is obvious, therefore, that the cheap set working on the common supply at the Exhibition is making a nicer noise than it would make in the listener's home.

On the other hand, the comparatively expensive receiver which is usually sold as a "high-fidelity model," may have an overall response flat up to the same limit as the B.B.C. amplifier, but it will have an undistorted output of anything from seven to twelve watts and, in many cases, it will have a speaker which was designed to work at its best with such an output. It should always be remembered that, for a given sensitivity, the speaker which is most free from resonances will always sound "quieter" than a speaker which has well-marked resonances, since these may increase the output at certain frequencies by as much as ten times, and so give an *apparent* increase in sensitivity, which, whilst certainly increasing the noise output, is hardly increasing the undistorted musical sound output. Furthermore, the wider the response of a speaker the more will it show up harmonic distortion, and as harmonic distortion is most frequently caused by overloading the output stage, it is customary, when using a high-quality speaker on a high-quality amplifier, to use adequate output so that overloading will not be approached. What chance, then, has the speaker in the 80-guinea *de luxe* outfit got of showing its paces on 250 milliwatts?

An Appeal to the Organisers

Long before the details of this year's exhibition were settled I pleaded with the authorities for an entire reorganisation of the system of loud-speaker demonstrations. It is a fact that cannot be got round that radio signals cannot satisfactorily be picked up in Olympia owing to the screening of the steel frame of the building, and owing to the existence of severe electrical interference. Furthermore, if exhibitors were allowed to pick up radio programmes direct, it is more than likely that a very fair imitation of a modern Tower of Babel would result.

In Broadcasting House the National and Regional programmes are "piped" round the building and, at selected points, an amplifier and speaker are connected to the circuit. My suggestion was that the

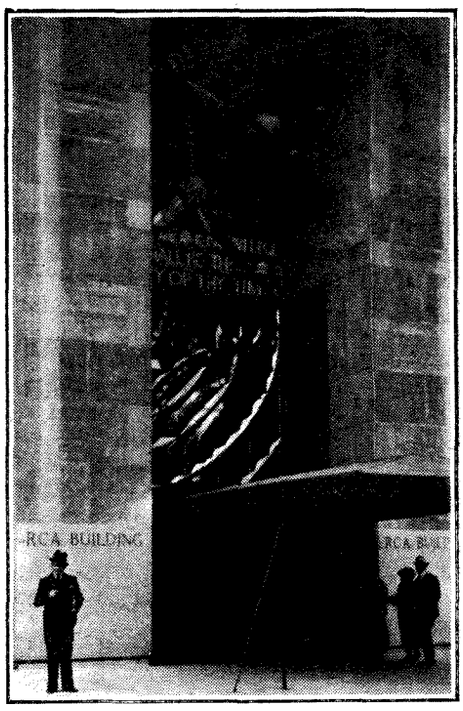

B.B.C. ENGINEER IN NEW YORK. Mr. R. H. Wood, in charge of broadcasting on the *Queen Mary*, photographed before the imposing entrance to the R.C.A. Building, Radio City.

Regional programme should be fed to the B.B.C. amplifier at Olympia, and that each exhibitor be provided, not with 250 milliwatts, but with 1 volt RMS. As practically all sets can be used as gramophone amplifiers, the exhibitor would apply this 1 volt RMS to the pick-up terminals of his set, so giving the public an idea of how his AF amplifier and speaker would sound under ordinary domestic conditions. Even this scheme would give the cheap set an unfair advantage, in so far as the cheap set has usually a wretchedly designed RF amplifier, but it would be a step in the direction of telling the public a part of the truth.

Objections

My suggestion was turned down on the grounds that it would lend itself to considerable abuse by unscrupulous exhibitors, although it is quite obvious that such a tendency could be suppressed without much difficulty. My own opinion is that such a scheme would reflect so much discredit on the makers of mass-produced sets, who are, of course, the exhibitors who take the largest stands, and who are, as a rule, the most important factors in the exhibition management, that, so far from the exhibition being a sales booster, it would be a sales destroyer. In other words, "the gaff would be blown," for you do not realise how bad a cheap set is until you have heard a good one very nearly alongside it.

I am quite convinced the public would welcome the opportunity of assessing the relative merits of cheap sets at an exhibition where there are no dealers with axes to grind, and where they could inspect a wider selection than they can get in any dealer's shop.

On the other hand, the man whose expenditure need not be so modest would be able to exercise his critical faculties to the full at a rational exhibition which purported to show him the latest developments in electrical reproduction.

And how would I arrange a rational exhibition? I would assume that the purpose of the exhibition would be not only to show what the sets look like but to demonstrate how they sound. I would provide each exhibitor with a stand consisting of an exhibition platform and a sound-proof demonstrating room about the size of an ordinary living-room. Therein the exhibitor would take the aforementioned 1 volt RMS, and proceed to do his stuff.

With all loud speakers working inside sound-proof rooms it is obvious that some external musical entertainment would be required, so I would engage a good band or light orchestra to play at various times throughout the day, and when this band was playing I would pick up the sound with a high-quality microphone and pass the output through the B.B.C. amplifier and so to the stands, so that the public would have an opportunity of comparing the real thing with what is frequently stated to be the real thing.

I would ask for very complete co-operation from the B.B.C. directed mainly towards driving firmly into the public mind that a costly and indispensable organisation has been built up out of public money to provide a service whose value is obvious, but only truly valuable if that service is not greatly mutilated by improperly designed radio receivers.

Effect on the Public

Finally, I would advertise this new type of radio show very extensively, pointing out that, whilst there were going to be no side shows, the public would have the one chance of the year to compare, with scrupulous fairness, the excellence of the various sets available, and what extra benefits they derived from paying a little more for their new receiver.

I believe the public would support such an exhibition, because it would be full of interest, in that it was exhibiting what it purported to sell (and you must remember that a radio set is not primarily an article of furniture, but a device intended to emit sounds). Would the industry support it? I know one firm who would, but I also know a number of large firms who dare not. Of course, a revolution in the industry might take place. The industry might decide to spend a large sum of money in a Press campaign to educate the public into paying more money for its radio, so that better sets could be made. The larger firms might wake up to the fact that their price-cutting tactics of the past three years have been wholly responsible for the decline in public interest and profits, and make up their minds to stop playing the fool and turn out something worth while for a change. Yes, they might; on the other hand, they might not, and as I am not a prophet I think I will leave it at that.

Radio on Germany's Latest Floating Island

From Our Berlin Correspondent

NEW MOTHER-SHIP FOR TRANSATLANTIC AIRCRAFT

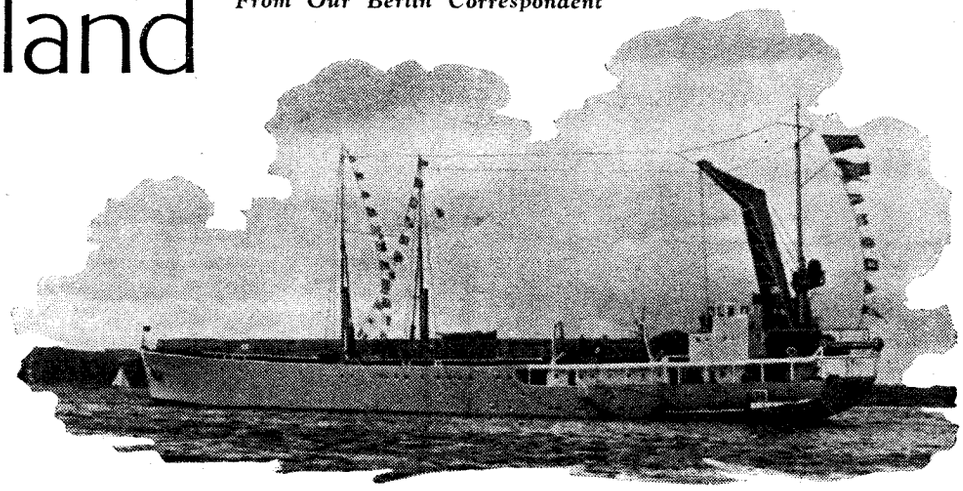

The *Ostmark*, Germany's specially constructed mother-ship for tending seaplanes operating on the South American Postal Service.

LUFT-HANSA, the German air line, has had a regular weekly postal service across the Southern Atlantic in operation between West Africa and South America since February, 1934.

As this service is carried out by means of seaplanes it was found necessary to arrange for a floating base in the South Atlantic. The *Westfalen*, a former tramp vessel, was adapted for the purpose, and later a second floating island was provided by the steamer *Schwabenland*. These steamers, which act as floating bases on each side of the Southern Atlantic, contain a powerful catapult arrangement for launching the 'planes.

A third floating island, the *Ostmark*, has now been put into service. It is the first ship specially built for this type of work, and will take the place of the *Schwabenland*. She will be stationed at Bathurst, in British Gambia, and, having been designed as a coastal ship, is smaller than *Westfalen* and *Schwabenland*.

Accommodation for the crew on board is much more extensive than on other ships, as the men have to live afloat for months on end. There is a cinema on board and, in addition to the catapult, repair and refuelling equipment for the aeroplanes is installed.

The radio equipment is surprisingly elaborate; in fact, the radio installation on board the big ocean liners *Europa* and *Bremen* is not bigger than that on the *Ostmark*. The operators have to be in constant touch with the 'planes as well as with meteorological stations, and also to handle normal traffic. The wireless equipment consists of one 3-kW long-wave transmitter for telegraphy and telephony on 600-3,600 metres; a 700-watt telegraphy-telephony short-wave transmitter for all waves between 15 and 90 metres, and a 70-watt short-wave transmitter for telegraphy with a wave-range of from 20 to 100 metres. A 300-watt quenched-spark transmitter is fitted for use in emergencies.

The first set of transmitters is fed from converter sets which can be operated by means of press buttons in the wireless cabin. All motors on board are fitted with anti-interference appliances.

As the *Ostmark* will carry out meteorological and aircraft traffic as well as normal communication, her wireless equipment is as elaborate as that of many 50,000-ton liners.

On the receiving side there are two commercial superheterodyne receivers for wavelengths between 15 and 200 metres, an all-wave set for 15 to 20,000 metres, two highly selective straight-circuit medium- and long-wave receivers for 400 to 4,000 metres, and a receiver with a high-frequency selector stage for use during traffic congestion on the short waves.

The entire installation has been designed to make it possible for one long-wave and two short-wave transmissions to take place at the same time as reception on both long and short waves.

The ship has three masts, only one of which is permanent; the two forward ones have to be lowered whenever a 'plane is shot from the catapult.

How to Avoid Remote

SPEAKER EXTENSION WIRING AS AERIAL TRANSMISSION LINE

By "CATHODE RAY"

A SHORT while ago I issued a few words about Remote Control. The Need, the Method, etc., all duly set forth in order. The general conclusion of readers (being so rash as to assume that there were any) may well have been that any reasonably complete system of achieving remote control is too complicated or costly to be worth while. At the same time, occasions when one is laid up in bed, for example, are just those on which one has time to enjoy programmes; but illness is likely to be aggravated rather than appeased if the nature and volume of programmes is not under the control of the patient.

It may have occurred to some to ask "Why not move the receiver into the occupied room, instead of trying to control it from a distance?" The keen listener who wants to sit well back from the loud speaker is generally keen enough to have his speaker separate from the control panel, so he is not necessarily excluded by such a suggestion.

At one time portables were almost universal, and the problem of remote control hardly arose. The fact that they have ceased to constitute a substantial proportion of sets now being sold suggests that there is a snag somewhere. There is. It was explained in my "Why Not Frame Aerials?" (April 3rd, 1936). Briefly: the compact aerial is an inefficient collector of programmes. Worse still (under modern conditions), it is a fairly efficient collector of noise. Result: except in favourable circumstances there are few programmes that can be received at full strength on a background of silence. The same is even more true with regard to "mains aerials." They pick up all the interference that is going.

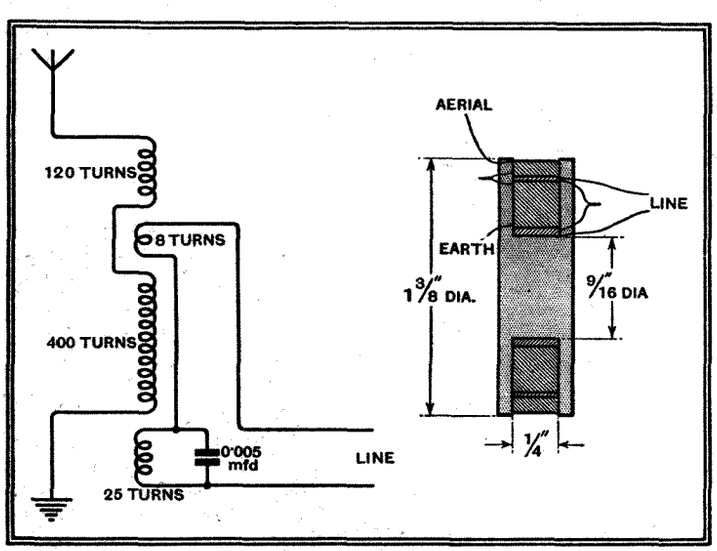

Fig. 1. Connections and windings of aerial-to-line transformer.

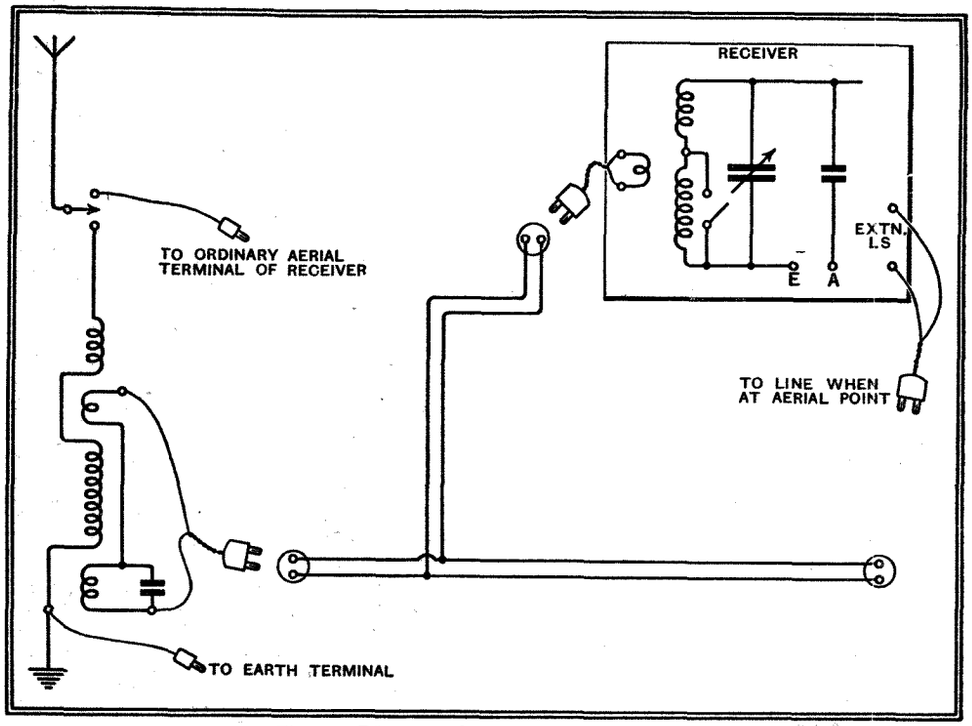

Fig. 2.—Diagram of complete aerial transmission line system. When the receiver is in use at the aerial end the ordinary aerial and earth connections are used, and the line is available for extension loud speakers.

The answer to the question, then, is that if the receiver is moved away from its outdoor aerial point its performance drops off very badly. One cannot everywhere guarantee satisfactory reception even of the locals.

Now that loud speaker wiring is (or should be) general, there is an alternative to remote control. This wiring can be used to distribute radio frequency instead of audio frequency.

Accustomed though we now are to screened aerial down-leads, it may be thought that such wiring would be quite hopeless for the purpose. My own wiring system is about as bad as could be from this point of view (within the limits of a house of ordinary extent). Eight rooms are wired in parallel, with lead-covered electric lighting cable; and the capacity of the two wires to earth turns out to be 0.0125 mfd. Wire to wire it is 0.004 mfd. Simply connecting aerial and earth to one socket and receiver to any other would, certainly, be hopeless. The wiring constitutes a very low-impedance system, which can be made to link up high-impedance systems (aerial and receiver) by means of suitable step-down and step-up transformers. With the aid of extensive high-brow maths, transformers could be designed that would give highly efficient results with any one combination of aerial, wiring, and receiver; but they would have to be worked out all over again for every other set of conditions; and the fact that it would be right for only one particular wavelength would not enhance the utility of the scheme.

So by somewhat less elegant means I have arrived at a simple arrangement that gives a definite advantage over the indoor or mains aerial at all medium and long broadcast wavelengths, using a very typical ordinary aerial, wiring, and receiver. Similar results—slightly worse or better—may be expected with other typical ordinary aerials, etc., etc.

Control

Fig. 1 gives details of the aerial-to-line transformer. It consists of two sections on each side, these being designed to respond to medium and long waves. The dimensions are given of the coil former, which in the original is an old Telsen HF choke bobbin, but which may, of course, be built up from discs. A saw-cut is made from the edge to the start of the winding, to allow connections to be taken in and out. The wire throughout is 32 DSC copper; and first 25 turns of secondary are put on, then 400 turns of primary, and so on as shown. Finally, a turn and a half of insulation tape to hold it together.

The arrangement at the receiver end depends on the receiver itself. In some the aerial is led to tappings low down on the aerial tuning coils, or to a few turns around them, there being no condenser in series. In such a case the line can be connected straight to aerial and earth terminals. If the existing aerial coupling is of any other type it must be replaced by a few turns of wire wound around the earthed end of the medium-wave coil. Fig. 2 shows a circuit for a complete system. No waveband switching is required other than that already in the receiver. When the receiver is in its normal position, at the aerial end, the transformer is, of course, cut out, and the line is available for extension loud speakers.

HF and LF Combined

By the way, I had a shot at using it for both purposes at once. This is a requirement that is not very likely to arise, which is fortunate, for the conclusion I came to was that, while it is quite a possible scheme if one wants it badly, it does not fit very well into the most usual combinations of conditions. To preserve the speakers from being short-circuited it is necessary to put in series with the coils, at each end of the line, condensers of a capacity somewhat larger than that of the line. Unless the line is considerably less capacitive than mine, such condensers cut all the "top" out of high-impedance speakers. And low-impedance speakers shunt the radio-frequency material rather badly. Loud speakers of 50 or 100 ohms would do quite well, but that is just what one does not get. Then, unless the filtering in the receiver is well-nigh perfect it is difficult to avoid instability. There are various ways of solving the whole problem, but each case would have to be worked out individually, and I have no time for that.

Instead, I am now going to report the results of tests made with what has already been described as typical ordinary equipment—a very average household outdoor aerial from a tree in the garden, and a ditto ditto superhet (frequency-changer, IF, diodes, and output pentode).

Fig. 3 illustrates some of these. Curve A refers to the sensitivity (microvolts to give standard output) under standard conditions, using the standard dummy aerial, with no transformers or line. The sensitivity is very moderate—around 100 microvolts. Curve B shows what happens when the complete line system is interposed, using 4 turns around the aerial tuning coil. Curve C is for similar conditions, except that 6 turns were used. In each case there

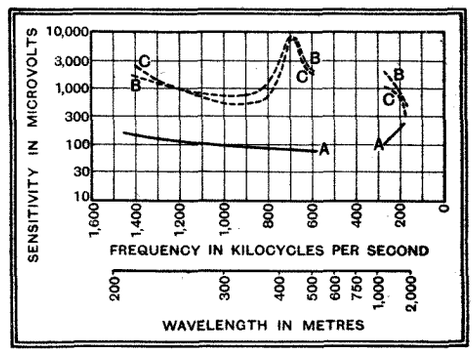

Fig. 3.—Sensitivity curves of typical receiver and outdoor aerial: (A) directly connected, and (B) and (C) with the line and transformer system, showing the loss due to the latter. Curve (B) refers to 4 turns coupling line to receiver; (C) 6 turns.

is a considerable loss, particularly at 700 kc/s (430 metres), where the aerial circuit of the receiver is mistuned by a line resonance. The sensitivity can be brought back again at this spot by retrimming the tuning condenser, but of course that puts others wrong. One may have the luck to get any such "dead spot" between the wavebands. It depends on the line, chiefly. In any case it is worth seeing whether there is any all-round advantage in readjusting the trimmer.

What with dead spots and whatnot, it looks as if the line system introduces too much loss to be worth while. So the next test is to show how it compares with the mains aerial as an alternative. The strength of reception from three strong stations—Droitwich and the two Londons—was measured with outdoor and with mains aerials by connecting a microammeter in series with the signal diode load resistance. Next the actual number of microvolts from a signal generator to reproduce these results was noted. This gave a measure of the strength of signal picked up by the two sorts of aerial. Two sets of figures were obtained for the mains aerial because there are two ways of plugging the receiver into the mains.

The outdoor aerial—though not exceptionally well situated—thus shows a 33 to 110-fold advantage over the mains aerial. In the fifth column these ratios are converted into the equivalent decibels gain; next comes the loss in decibels due to the line system (taken from Fig. 3), and lastly the substantial net gain.

Improved Signal/Noise Ratio

Actually the gain is better than these figures disclose. The mains aerial introduces far more noise than the open aerial, so if the signal/noise ratios were to be given they would be very large indeed, even at the 700 kc/s dead spot. A proper anti-interference aerial would show still more advantageous results.

These paper results were corroborated by actual reception tests, for some of which an electric cleaner (without suppressors) was used to provide a high interference level. Neither these tests, nor the preceding ones, left any doubt as to the advantage of using an outdoor aerial, even with all the additional losses due to a "heavy" line. Of course, non-screened loud speaker wiring, such as ordinary flex, would tend to pick up more noise; on the other hand there would be less signal loss; and with the lower capacity a rather larger number of turns in the coils on the line side would be advisable. Incidentally, it is needful to take care that the connections on the line side are of low resistance throughout, for a few ohms resistance anywhere is serious in a way that does not apply to the aerial or receiver sides. So look to the joints and the plugs and sockets.

NEW McMICHAEL "LIGHT-WEIGHT."—Like its well-known prototype, this new receiver, which weighs only 22½ lbs., employs an HF.-det.-2LF circuit.

Station	Microvolts of Signal		Ratio of results	Decibels gain	Decibels loss due to line	Net gain
	Outdoor Aerial	Mains Aerial				
Droitwich	57,000	680 700	84 84½	38½ 38	10	28½ 28
London Regional.. ..	100,000	3,000 3,000	33⅓	30½	15½	15
London National.. ..	33,000	300 1,000	110 33	41 30	18	23 12

CURRENT TOPICS

EVENTS OF THE WEEK IN BRIEF REVIEW

The World's Largest Studio

WHAT is said to be the world's biggest broadcasting studio has just been opened at the Great Lakes Exhibition in Cleveland, Ohio. This "studio" is fitted with one hundred microphones and will hold an audience of 13,000 people. It will remain in use until October, when the Exhibition closes.

The German Wireless Exhibition

THE Berlin Radio Show will be open from August 28th to September 6th, almost the same period as that covered by our own Olympia Show. The great feature of the Show will, it is said, be television, and extensive plans are being drawn up in order to bring it to public attention. This is in strong contrast to the state of affairs over here, where nothing has yet been definitely settled with regard to television demonstrations at Olympia.

Loud Speaker Restrictions in Italy

A DECREE of the Italian Government, promulgated last February, forbidding the use of loud speakers outdoors without a special permit, has been somewhat relaxed for the summer months, mainly for the benefit of holiday resorts. There are, however, still very severe restrictions against open-air broadcasting during certain hours, notably those which normal people spend in sleep.

Wireless Monument

AN interesting souvenir in the form of an illustrated book—has been published by Amalgamated Wireless of Australasia to commemorate the opening of the Wahroonga Monument. This monument is erected at the spot in Wahroonga, near Sydney, N.S.W., where the first direct wireless message from England was received on September 22nd, 1918. This message, which was sent by the Australian Prime Minister, who was then in England, is inscribed on the monument, together with other relevant details of the occasion.

Colonial Listeners

FRANCE is stated to be greatly disturbed over the small number of wireless listeners in her various colonies and dependencies. It is estimated that they only total 3,000, whereas Holland can claim over 30,000 colonial listeners.

Dutch Sets for India?

COMPLAINTS have been made from time to time that wireless apparatus designed for use in Europe will not stand up for long periods to the climatic conditions to be found in the various tropical and sub-tropical countries. One of the greatest markets for radio sets is in India, where conditions are very bad from the climatic point of view. A distinguished Dutch engineer is in India for the purpose, it is said, of studying these conditions on behalf of the well-known Dutch firm of Philips. At their factory at Eindhoven, Holland, special rooms are said to have been established in which a tropical climate is produced artificially, and sets are tested in them over long periods.

Bath Chair Radio

RADIO on motor-driven invalid chairs is apparently the latest idea in America. One enterprising dealer has fitted a special radio receiver on an invalid chair of the hand-driven type belonging to a crippled newspaper seller. As a result of the publicity gained in this way he has been inundated with orders not only for invalid chair sets but also for car sets. In any case, car radio is a good seller in the U.S.A., since the average American can't bear to be out of earshot of some sort of noise.

Indian Aeradio Progress

THE use of wireless at Indian aerodromes is to be greatly extended. All main aerodromes in India are at present supplied with medium-wave transmitters, the wavelength being in the neighbourhood of 900 metres. These are used for communicating with aircraft and with other aerodromes. Owing to the increase of air traffic, considerable wireless congestion has arisen, and short-wave transmitters are, therefore, to be established at certain selected aerodromes. Medium waves will still be used for communicating with aircraft, the short waves being employed for working between the more distant aerodromes. The staff is to be increased to enable a continuous night watch to be kept at all stations from Karachi to Calcutta.

Death of Well-known Wireless Pioneer

OLD readers whose memories go back to pre-broadcasting days will regret to learn of the sudden death of Mr. Will Day, which occurred on July 15th. He was a well-known figure not only in the wireless industry, but also in the cinematograph world, and it may truthfully be said that he was associated with both right from the beginning.

Still in the Middle Ages

THERE are said to be only five independent countries in Europe which are entirely devoid of broadcasting stations, these being Albania, Andorra, Liechtenstein, Monaco and San Marino, although in the case of Andorra plans are afoot to remedy this deficiency. Greece is not much better off since the stations working there are low-powered and irregular in operation. In the case of Liechtenstein and San Marino, the authorities of the countries are said to have boasted that, in addition to an absence of radio, they do not possess even a solitary cinema.

Deaf and Dumb Radio

AS a sequel to research work carried out in Paris, special wireless receiving apparatus has been developed for use by deaf persons, using bone conduction. The apparatus has been installed in a school for deaf and dumb children in the Belgian province of Brabant, and if these experiments are successful the use of the receivers will be greatly extended. As many readers will be aware, somewhat similar apparatus has been described in this journal.

The Perfect Microphone?

YET another "distortionless" microphone has apparently been invented, the place of origin this time being Cologne. The instrument has, of course, a flat frequency response and is naturally considerably more sensitive than anything that has been known before. It is astonishing, however, to find that no claim has been made that it discriminates between wanted and unwanted sounds. This latter point has apparently been overlooked, but it should be a small matter to remedy it.

U.S. Police Radio

ACCORDING to reports, U.S. police have been given additional frequency bands, namely, 2,000 to 2,100 and 2,750 to 2,850 kc/s, these being formerly occupied by television, which has, of course, moved upwards in the direction of higher definition, the bands which it now occupies being 42,000 to 56,000 kc/s.

Mr. B. J. Thompson, inventor of the "Acorn" valve, has been honoured with the Morris Liebman Memorial Prize for 1936. The "Acorn" will probably play an important part in opening up the development of reception on ultra-short wavelengths. Mr. Thompson is on the Research Staff of the Radio Corporation of America.

Polytechnic Wireless Course

THE 1936-37 prospectus of the Northern Polytechnic includes a course in radio-technology, special attention being paid to servicing. Full details may be obtained by applying to the Principal, Northern Polytechnic, Holloway, London, N.7.

Psychological Idiosyncrasies

IT is well known that many quite famous actresses when broadcasting for the first time experience microphone fright, although they never suffer from ordinary stage fright. One French artiste has stated that she feels faint even when she hears one of her gramophone recordings broadcast. This is probably due to a similar psychological reaction to that experienced by certain authors, who are said to catch cold when reading some of their own works or hearing them broadcast.

Index and Binding Case

THE Index for Volume XXXVIII of *The Wireless World*, January to June, 1936, is now ready, and may be obtained from the publishers at Dorset House, Stamford Street, London, S.E.1, price 4d. post free, or with binding case 3s. 1d. post free.

New Apparatus Reviewed

Recent Products of the Manufacturers

BULGIN SHORT-WAVE COMPONENTS

IN order to make available to experimenters some highly efficient short-wave coils, A. F. Bulgin and Co., Ltd., Abbey Road, Barking, Essex, recently introduced a series which are described as open-type plug-in short-wave coils. For these a large-diameter skeleton former consisting of two 3in. end rings and having six cross-bars of ebonite is employed. Grooves cut in the ebonite bars serve to space the turns.

Since each carries two separate windings, one of which is the tuned winding and the other a primary or reaction as the case may be, some form of support is necessary, and this style of construction approaches as close as possible to an entirely self-supporting coil which is admittedly the most efficient for short-wave use.

There are four coils in the series, providing a tuning range of 10 to 180 metres, their respective coverages with a 150 mmfds. condenser being approximately 10 to 22, 20 to 45, 40 to 87, and 80 to 180 metres. They are described as the types S.W.35 to S.W.38 inclusive, and cost 4s. 6d. each.

Baseboard-mounting coil supports for these cost 1s. 9d. a pair, and the plugs and sockets are so arranged that the coils are non-reversible.

Another new short-wave component is an air-dielectric pre-set condenser for baseboard or chassis mounting, and which is available in capacities of from 3.5 mmfds. to 56 mmfds. maximum.

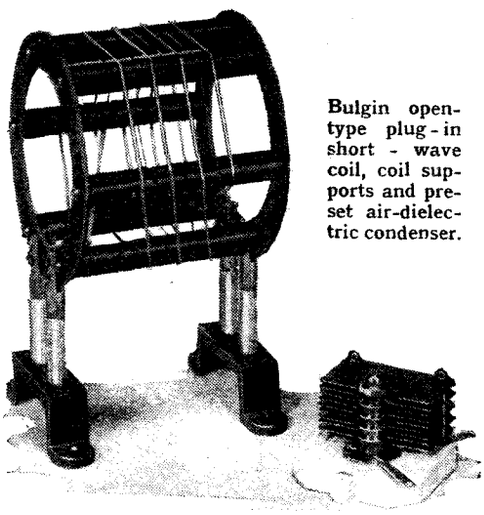

Bulgin open-type plug-in short-wave coil, coil supports and pre-set air-dielectric condenser.

The specimen tested had a nominal capacity of 26 mmfds. according to its list number, though according to a marking on the component the makers give its capacity as 34 mmfds. From measurements made the minimum capacity was found to be 4.5 mmfd. and the maximum value 33.7 mmfds.

A component of this type has many uses in short-wave work, for it can be employed either in small power transmitters or in receivers, and the new Bulgin model is of special interest in view of the very small capacities in which it is made. Up to 14.5 mmfds. the price is 3s. each, while larger sizes cost 3s. 6d. each.

WIRT VOLUME CONTROL

THE Wirt volume control is an American product made by the Wirt Company of Philadelphia, and is being marketed in this country by Amerad (Great Britain), Ltd., Aldwych House, Aldwych, London, W.C.2.

The resistance element is of the carbon composition type with the resistance compound fused into the surface of a strip of insulating material, the preparation of the element being such that it is claimed to be very reliable and impervious to mechanical wear, such as that imposed by the rubbing of the moving contact.

The element is mounted edgewise in the bakelite case and the moving arm makes contact with the inside face, being held firmly against it by spring tension.

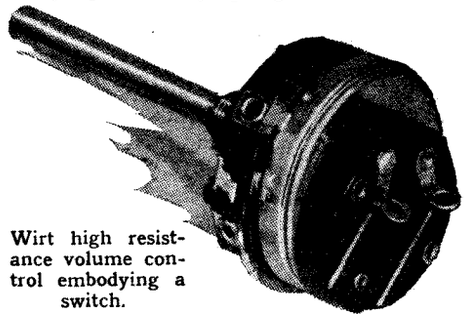

Wirt high resistance volume control embodying a switch.

Wirt volume controls are made in values ranging from 5,000 ohms to 3 megohms and with five different gradings of the resistance element. These have been chosen to suit different operating conditions, and give linear, logarithmic and variations of logarithmic change in resistance. They can be supplied with or without a switch, the rating of which is one amp. at 250 volts.

A 500,000-ohm specimen was tested and found to have a measured value of 520,000 ohms, which is well within the tolerances allowed for this class of component. It is silent in use and quite satisfactory in all other respects.

A spindle 2in. long is fitted and this can be cut to suit individual requirements and, as is now the usual practice, the spindle is insulated from the resistance element.

There is a small pip moulded on the face of the case which, when inserted in a hole in the mounting bracket, gives a secure fixing and prevents the component rotating about the centre bush.

The Wirt volume control costs 4s. without switch and 5s. with switch.

RADIO-AID HT BATTERY

A SMALL HT battery, that is to say, small physically, has been introduced by Radio-Aid, Ltd., 45, Duke Street, London, W.1, especially for use in deaf-aid appliances and in miniature portable receivers, amplifiers and the like where space is strictly limited.

This battery has a voltage of 52 yet measures only $3\frac{1}{8}$in. × 4in. × $1\frac{7}{8}$in., and an interesting feature of its design is that connection is made to two brass strips located behind a cardboard cover on the side. Two narrow slots in this cover give access to the contact lugs. The two external HT leads are soldered to a pair of narrow brass strips, each about 1in. long and $\frac{1}{4}$in. wide. They are shaped so that they press hard against the contact lugs as well as against the inner side of the cardboard cover, and this serves to retain them in position.

Radio-Aid 52-volt miniature HT battery.

The exposed part of the connector can be protected by a piece of insulating sleeving, so that the whole of the HT leads are insulated right up to the point of connection to the battery and there is no risk of short-circuits. The battery costs 6s. 6d.

CLIX NEW VALVE HOLDER

IN connection with the review in *The Wireless World* of July 10th last of the new Clix valve holder assembled on a ceramic plate, Lectro Linx, Ltd., wish it to be known that the reason advanced for the adoption of the special design only applies in the case of their valve holder. The shrinkage that it was stated occurs during the firing process in the manufacture of the ceramic material is actually very small indeed, and a degree of accuracy quite ample for all normal purposes can always be assured in the production of moulded parts for wireless components and other purposes.

The Radio Industry

The British Standards Institution, 28, Victoria Street, London, S.W.1, has issued a revised specification for enamelled copper wire. Copies of this specification (B.S.S. No. 156-1936) may be obtained for 2s. 2d. post free.

◇ ◇ ◇ ◇

The reorganisation of Charlton Higgs Radio, Ltd., is nearing completion, and it is anticipated that the firm's new season's programme will be released shortly. Enquiries should be forwarded to Westbourne Works, Hove, Sussex, or to the firm's London office at 41, Berners Street, London, W.1.

◇ ◇ ◇ ◇

A. Barson and Co., Ltd., 49, Wool Exchange, Coleman Street, London, E.C.2, send us a leaflet describing a new illuminated screwdriver.

◇ ◇ ◇ ◇

A new list describing Magnum multi-contact switches has been issued by Burne-Jones & Co., Ltd., "Magnum House," 309-317, Borough High Street, London, S.E.1.

◇ ◇ ◇ ◇

M.R. Supplies, 11, New Oxford Street, London, W.1, have issued a leaflet in which *Wireless World* reviews of various M.R. products are reprinted.

The Possibilities of Light-beam Television

A RIVAL TO THE RADIO CARRIER-WAVE ?

By O. S. PUCKLE

DESCRIBING the operation and advantages of the electron multiplier, with speculations as to the possibility of using this device for television, not with the radio carrier of convention, but with a beam of light.

A SHORT while ago Dr. V. K. Zworykin demonstrated his Electron Multiplier during a lecture before the Institution of Electrical Engineers in London (February, 1936). This instrument is of the greatest possible interest to television engineers, for it will enable them to provide better television pictures; it is the object of this article to explain the reasons for this improvement and to outline a method of television transmission, using visible or invisible light instead of wireless as a carrier.

The electron multiplier consists essentially of a photo-cell and a current amplifier in one envelope and is used instead of a photo-cell and a number of separate valves (voltage amplifiers).

The electron multiplier as developed by Dr. Zworykin consists of an evacuated glass bulb containing a number of cathodes about 1 centimetre square in area arranged in a row, each cathode being coated with a photo-electric material such as caesium oxide. Opposite the cathodes and about 1 centimetre away is a row of anodes, or deflector plates, of about the same size. The anodes are situated as shown in the diagram, Fig. 1, in which the photo-cell cathode is marked A. When light falls upon this cathode, electrons are emitted and are attracted towards the first anode but are bent back by the action of a magnet, so that they strike the next cathode.

When electrons are made to strike a photo-electric surface in a certain manner each electron can give rise to the emission of a number of secondary electrons from the surface. Because of this secondary emission effect a greater number of electrons leaves the second cathode than originally reached it.

The electron stream leaving the second cathode is then attracted towards the second anode, but is again bent towards the next cathode by the magnet, and the number of electrons is once more multiplied. After passing from stage to stage and being amplified in each one, the electrons finally strike the anode of the final stage which may be arranged in triode or pentode form. The final anode is provided with an external anode load and is therefore a voltage amplifier.

Fig. 1 shows also the method of application of the necessary accelerating potentials. The potential is adjusted to about 40 volts per stage. The actual value depends on the field strength of the magnet and must be accurately adjusted to bend the electron stream so that it strikes each cathode in turn. It is also of importance that the magnet be correctly oriented, as, if this is not done some or all of the electrons in the beam will fail to strike the next cathode and the overall amplification will be very much reduced. It is necessary to focus the light on to the first cathode to avoid electron dispersion in the later stages, since the electron focusing is not perfect.

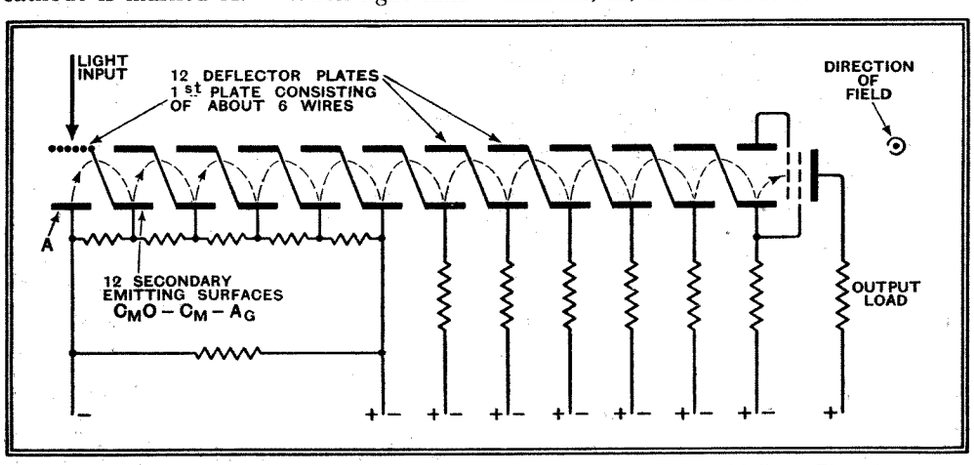

Fig. 1.—Arrangement of cathodes and deflector plates in the electron multiplier. The electron path is shown in dotted lines.

The electron multiplier is capable of providing an overall gain as great as 10^5 to 10^7 times compared with 5×10^3 or 10^4 times, which is about the maximum obtainable with an ordinary vacuum tube amplifier having a band-width of 2 megacycles. In each case the limiting factors are noise and stability. When it is realised that the electron multiplier provides this relatively enormous amplification, together with a greatly increased band-width, the advantages which accrue from its employment are obvious.

" Johnson Noise "

The reasons for the increased band width and reduced noise/signal ratio are as follows.—In the absence of light on the first cathode no electrons are emitted and no anode current flows in the final anode circuit, so that the noise voltage is then solely that due to "Johnson noise" in the final anode load. "Johnson noise" is that due to potentials set up in the circuit by thermal agitation of the particles composing the material of which the circuit is constructed. The amplitude of this potential at any given frequency is dependent only upon the impedance and temperature of the circuit. For this reason, the signal/noise ratio obtained with an electron multiplier is very much higher than is the case when an ordinary amplifier is used.

Since there is only one circuit across which a potential has to be developed (the final anode circuit), the high-frequency loss is greatly reduced by comparison with that attainable in an ordinary vacuum tube amplifier and, as a result, a flat frequency characteristic can be produced over a much wider band of frequencies. This wide frequency characteristic enables pictures of much better quality to be transmitted, especially as the noise is not increased as a result of the increased band width. It is an unfortunate fact, however, that the present band width of 2 megacycles is closely approaching the limit of expediency with the method of transmission at present in use, partly due to the difficulty of constructing high-gain amplifiers of extremely wide band-width and partly to the ether congestion which will undoubtedly result from the multipli-

The Possibilities of Light-beam Television—

cation of services in the future. It will also be a difficult matter to damp the radio transmitters and receivers sufficiently to enable much wider band-widths to be employed without materially reducing the amplification obtainable, unless shorter carrier waves are used.

Since there is still room for improvement in the definition obtainable in television transmission, it will be of interest to examine the problem in order to determine in what way the Zworykin electron multiplier may further the end in view.

Improvement in Definition

Consider first the transmitting end with relation to the possibility of taking advantage of the increased band-width obtainable with this new tool. Since greater amplification is obtainable it follows that the source of light may be reduced in power, and it is, in this case, a fortunate fact that with a cathode-ray tube film scanner, or with an Iconoscope, the spot becomes considerably smaller and better focused when the light output in the former case and the beam current in each case are reduced. Whether the fineness of the mosaic in the Iconoscope can be increased sufficiently to enable full advantage to be taken of the smaller spot remains to be seen. In any case, even with present methods, the use of the electron multiplier at the transmitting end is able to provide improved results. This is so because, especially with the higher numbers of lines, the size of the scanning spot and its brilliancy have at the moment to be pushed above the optimum value.

It is clear, however, that at least with cathode-ray tube scanners a material improvement in definition could be obtained if we could arrange to transmit the increased band-width necessary. One method of doing this would be to employ a light beam as a carrier wave instead of wireless. Such a system would become inoperative in fog or in smoke-laden atmospheres, but an infra-red beam might be used to overcome these difficulties in the future. Infra-red beams such as would be required for the system cannot at present be produced, and therefore this article will be limited to a discussion of the possibilities of visible light beam television.

The Zworykin electron multiplier opens up possibilities of such a system, since it has undoubted advantages at the receiving end as well as at the transmitter.

Let us suppose that one or more cathode-ray tubes be employed as light sources. Bearing in mind the fact that the brilliancy of cathode-ray tube screen materials has been enormously increased during the past two years, it is not unreasonable to suppose that sufficient brilliancy might be obtainable for night-time operation of such a system in the near future. This is especially reasonable in that the need for a focused spot disappears, and therefore the energy in the cathode-ray beam could probably be increased a thousand-fold or more without damaging the screen.

Presuming, therefore, that such a tube were to become available, it would be necessary to modulate the ray with a wave-form similar to that at preseent in use. For the white parts of a picture the beam would be modulated to provide maximum brilliancy over the whole surface of the screen, and it would be adjusted to a dim value for the black portions. The beam would require to be completely modulated out in order to transmit the synchronising signals. The potentials for modulating the cathode-ray tubes would be obtained from the output of an electron multiplier, the light input of which would be controlled by the scene to be transmitted. The synchronising signals would be injected into the anode circuit of the electron multiplier.

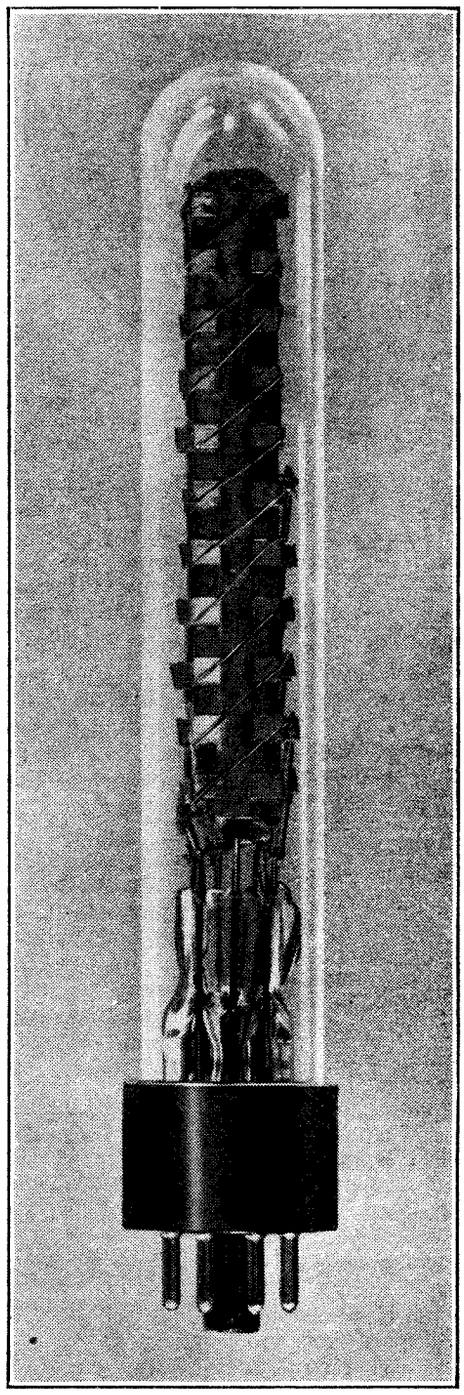

A ten-stage Zworykin Electron Multiplier. This particular specimen is on view at the Science Museum, South Kensington.

At the receiving end another electron multiplier mounted in a parabolic or other suitable reflector would be arranged on the roof, and would be oriented towards the transmitting cathode-ray tube. The output circuit of the multiplier would yield a television signal similar to that obtained from the radio set of the present type of television receiver, and this signal, after being passed through a suitable feeder, would be translated into a picture by means of a cathode-ray tube and two time bases, exactly as is done to-day.

There are many advantages in such a system which may be outlined as follows:—

(*a*) Considerably better quality of reproduction could be obtained on account of the wider band width obtainable, while at the same time ether congestion would not be aggravated.

(*b*) Interference by one television system upon another, especially during freak conditions, would be entirely avoided.

(*c*) Interference due to motor cars and other electrical sources of disturbance would be avoided. This forms the greatest obstacle to the enjoyment of television pictures at the present time.

(*d*) Inherent noise in the system would be very greatly reduced owing to the use of the electron multiplier at each end.

(*e*) The initial cost of the receiver would be considerably reduced, as also would the running costs.

The accompanying sound transmission could take place over a radio channel or *via* another light-beam system.

CLUB NEWS

Home Recording Society

DURING a recent discussion among several enthusiastic experimenters in home recording, the suggestion was advanced that possibly many other amateurs interested in this subject might welcome the opportunity to meet and exchange ideas and experiences.

A proposal was accordingly made to form an Amateur Sound Recording Society with the object of bringing together home-recording experimenters in South London districts.

Mr. J. F. Butterfield, 1, Manor Road, Beckenham, Kent, would be glad to hear from all interested in the matter so that a meeting can be arranged to discuss the project further.

Aldershot and Farnborough

Readers in the Aldershot and Farnborough district who are interested in the formation of a short-wave club are invited to get into touch with Mr. W. James, The Glen, Osborne Road, Farnborough.

The West London Radio Society

An interesting exhibit of ancient and modern wireless gear was given by the West London Radio Society at the Ealing Hospital Fête. Considerable interest was aroused by a special "radio car" constructed by the Society. Full details of the Society can be obtained from the Hon. Secretary, 22, Camborne Avenue, London, W.13.

The International Short-wave Club

We have received a copy of the monthly "News-Letter" published by the London Chapter of the International Short-wave Club. This interesting little magazine is a supplement to the club's official organ, "International Short-wave Radio," and will be forwarded free to any reader of *The Wireless World* who cares to send a stamp for postage to Mr. Arthur E. Bear, 10, St. Mary's Place, Rotherhithe, London, S.E.16.

Listeners' C

Outstanding Broadcasts at Home and Abroad

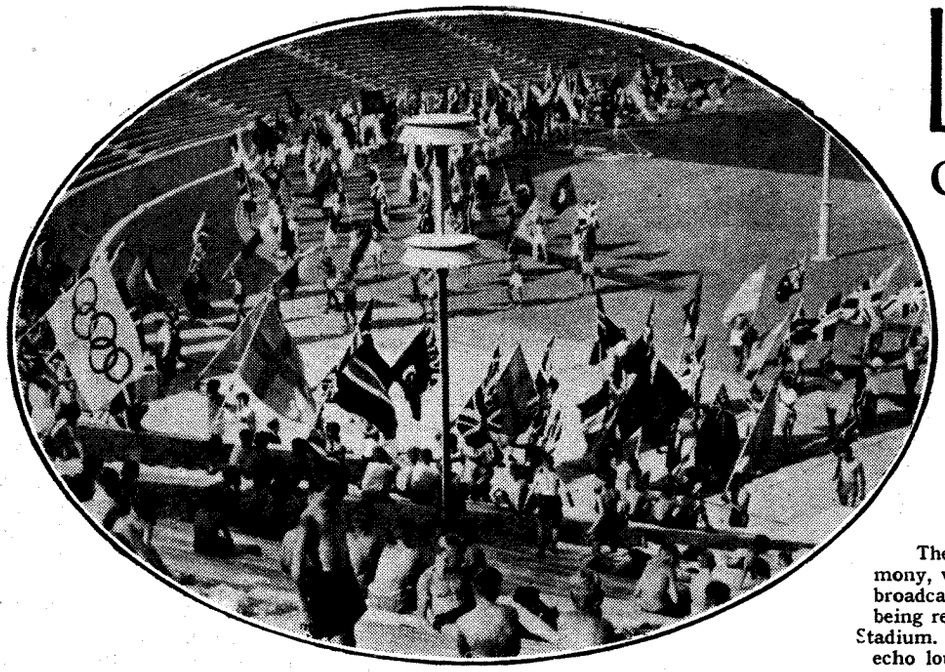

OLYMPIC GAMES. The opening ceremony, which is to be broadcast on Saturday, being rehearsed in the Stadium. Note the anti-echo loud speaker.

THOSE who will, by desire or necessity, be at home on Bank Holiday Monday will be able to join in the spirit of the day by listening to the varied programme offered. From the National transmitter there are to be two running commentaries by F. J. Findon from Brooklands. The first is at 3 o'clock during the race for the Lock King Trophy and the second at 4.20 when the three-lap duel between John Cobb and Oliver Bertram will be in progress. From the Olympic Games comes a relay at 4.55, and at 5.5 a running commentary by C. B. Fry on the cricket match between Surrey and Notts at the Oval.

In the evening at 8.30 will be revived the holiday play, "Coster Carnival," which was first produced in 1934. It is in the form of a holiday reminiscence written and arranged by Cyril Nash, and the cast will include Vera Lennox, Philip Wade, Carleton Hobbs and Doreen Costello.

OLYMPIC GAMES

DURING this week there will be four relays from the Olympic Stadium, Berlin. The grand opening ceremony by the German Chancellor, Herr Hitler, with a commentary by T. Woodrooffe on the scenes as the representatives of fifty-three nations march past the Chancellor and as the final runner in the Torch Relay which started at Olympia, Greece, arrives to light the Olympic Fire with his torch, will be broadcast 4.55 to 5.20 Nationally to-morrow (Saturday).

The singing of the Olympic Hymn composed by Richard Strauss and Handel's "Hallelujah Chorus" will end the broadcast.

The following relays in the National programme will also take place this week. Monday at 4.55, final of the 100 metres flat. Tuesday, 5.25, finals of the 400 metres hurdle and 800 metres flat. Thursday, 4.10, final of the 1,500 metres flat.

JOLLY TARS

THE Senior Service comes into the programmes twice this week. To-night from 7.45 in the National programme is to be included a forty-five minute broadcast of "A Day's Work in the Navy." This sound picture is in the hands of Laurence Gilliam with T. Woodrooffe as commentator, and is compiled from recordings taken on board H.M.S. *Royal Sovereign*. It will illustrate a typical day's life and work in a battleship.

On Saturday in the Children's Hour will be a recorded programme of impressions and happenings at the Plymouth Navy Week.

MAMMY LOU

ONE of America's oldest broadcasters, Mrs. Curtis Burnley Railing, known to the American radio public as "Mammy Lou," will be heard in the Regional programme twice this week. On Saturday at 7.45 she will broadcast for a quarter of an hour, and on Tuesday she will be heard in Ralph Coram's light entertainment, "How's That?" at 9 o'clock. Her speciality is impersonation, and she has the gift of portraying sympathetically the multitudinous characters which go to make up the American public.

SALZBURG

THERE are to be two relays during the next seven days from the Salzburg Festival in the National programme. On both occasions the Vienna Philharmonic Orchestra will be conducted by Bruno Walter. The first act of Gluck's "Orpheus and Eurydice" will be heard at 7.5 on Saturday and on Thursday at 9 the orchestra will play Brahms' Symphony No. 2 in D.

THE PROMS.

As a preliminary to the 42nd series of Promenade Concerts which begins on Saturday, August 8th, comes a discussion on this year's programme between an old Promenader and a young enthusiast. The Proms. have become so popular that it is somewhat misleading to call them "Promenade," for although the stalls give place to a fountain, goldfish pond, palm trees and flowers, there is no room for promenading and barely breathing space.

"LA VIE PARISIENNE"

THE broadcast version of Offenbach's comic opera, by A. P. Herbert and A. Davies Adams, will be revived in the Regional programme at 8.45 on Thursday, and again Nationally on Friday, August 7th. It was originally broadcast in 1933 using the multi-studio arrangement, but on these occasions will be heard from the St. George's Hall.

Despite its modern embellishments "La Vie Parisienne" retains the Offenbach atmosphere. The action takes place in the 1860's.

NIGHT WATCHERS

WHAT should prove to be a vivid and realistic broadcast is that which is to be given from the Beachy Head lighthouse in the National programme at 9.50 on Wednesday. Though this will last only fifteen minutes it will enable listeners to get a clear idea of the hermit-like life of the lighthouse watchers. Microphones placed at vantage points on the rocks will pick up the swish of the

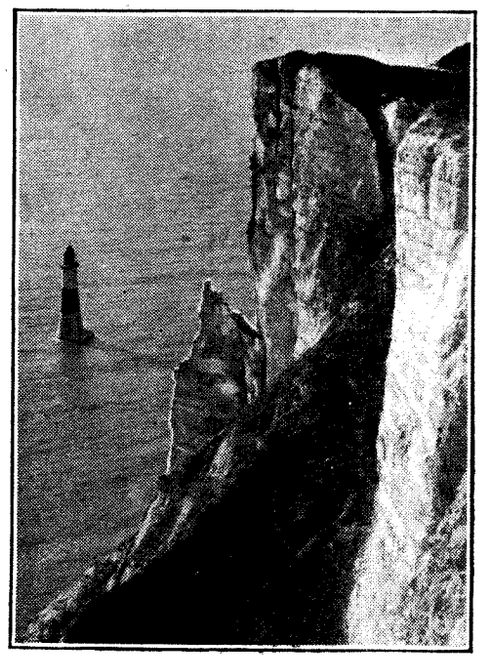

BEACHY HEAD with the lighthouse 570 ft. away from the cliff. An actuality feature programme comes from here at 9.50 on Wednesday.

Guide for the Week

ARTURO TOSCANINI with his wife. At his request "Falstaff" is featured four times in the Salzburg Festival this year.

waves, the calls of the birds, and the symphony of the wind on this watch tower of our coast.

This should be a very interesting broadcast. I wonder if it is generally known that the Beachy Head light is of 274,000 candle-power and is visible, in clear weather, sixteen miles away.

FROM THE SEASIDE

IN the fifth of his "Shows from the Seaside," Harry Pepper has arranged for 8.30 on Wednesday (Nat.) broadcasts of the "Fol de Rols" who are appearing at Eastbourne, Llandudno and Hastings. Although he will not be able to be at each of these, his idea is to announce from Devonshire Park, Eastbourne, and then while the broadcast from The Large Pier Pavilion, Llandudno is proceeding, to dash to the White Rock Pavilion, Hastings, and be there in time to announce the last item.

He's hot, stuff, is Pepper.

CONEY ISLAND

NEW YORK'S great popular playground, where tens of thousands of New Yorkers pour in on hot summer evenings, will be visited by Bob Trout, one of America's foremost radio personalities, who will describe for English listeners on Saturday at 10 (Nat.) some of the scenes in this great amusement park. The noises and chatter of the crowds will be heard, and we can be sure of a very vivid and lively commentary from Bob Trout.

"PREVENTION IS BETTER . . ."

FEW of us, if honest, will say that we enjoy a visit to the dentist, and invariably we put it off, suffering the discomforts rather than sit in the dentist's chair. It is the object of the Empire Dental Meeting, now taking place, to enlighten the public, and by preventive dentistry, especially in children, to spare them the pains that many of us know only too well. A talk from the meeting is to be broadcast at 8.45 on Thursday (Nat.).

Another of Verdi's operas, "La Traviata," comes from Radio-Paris on Saturday at 8.30. On Tuesday Warsaw is giving "Janek," a two-act opera by that intensely Nationalist composer, Zelenski, who was director of Cracow Conservatoire until the day of his death in 1921. From Paris PTT and most of the French stations comes Donizetti's four-act tragic opera, "La Favorita," from the Casino, Vichy, at 8.30 on Thursday.

CONCERTS FROM ABROAD

Two eminent British conductors are featured in the concerts from abroad this week.

Sir Henry Wood is to be the guest conductor of a symphony concert which Brussels No. II is taking from the Kursaal, Ostend, from 9 to 10.30 on Saturday. On Monday Sir Thomas Beecham is the conductor of the symphony concert from the Casino, Vichy, which Radio-Paris is broadcasting from 8.45 to 11.15. The principal soloist on this occasion is Piatigorsky ('cello).

SWISS NATIONAL FESTIVAL

A GALA programme for the Swiss National Festival will be relayed from 9 to 10.40 on Saturday by Söttens, Monte-Ceneri and Beromünster. First come chimes, followed by talks, and then an historical cantata, "l'Acte du serment de Tell" (Doret). This is followed by historical tableaux, readings, and ending with the Swiss National Anthem.

THE KURSAAL, OSTEND, where Sir Henry Wood will conduct a symphony concert on Saturday (Brussels No. II, 9 o'clock).

OPERA

FROM the Salzburg Festival to-night (Friday) comes Verdi's "Falstaff" conducted by the great Toscanini. "Falstaff" was the swan-song of the venerable Verdi, who was eighty years old when it was first produced in 1893. It will be relayed by Warsaw and the Swiss stations from 7.5.

THE AUDITOR.

HIGHLIGHTS OF THE WEEK

FRIDAY, JULY 31st.

Nat., 7.45, A Day's Work in the Navy. 8.30, "You Ought to See Us," Ronald Frankau.
Reg., 8.30, B.B.C. Orchestra (D) and Frank Laffitte (piano). 9.30, B.B.C. Military Band and Joan Coxon (soprano).
Abroad.
Deutschlandsender, 8.10, Wagner Concert.

SATURDAY, AUGUST 1st.

Nat., 7.5, "Orpheus and Eurydice" from Salzburg. 8.30, Variety. 10, Relay from Coney Island.
Reg., 7.45, Mrs. Curtis Burnley Railing. ¶B.B.C. Orchestra (B) and Frank Mullings (tenor). 9.30, Tidworth Tattoo.
Abroad.
Brussels No. I, 8, Sacred Concert by the Liége a-Capella Choir.

SUNDAY, AUGUST 2nd.

Nat., 5.10, B.B.C. Theatre Orchestra and The Comedian Harmonists. ¶Recital: Mary Jarred (contralto) and Jan Smeterlin (piano).
Reg., 6, Czechoslovak folk songs from Prague. ¶Tudor Davies and the B.B.C. Orchestra (C). 9, The Bexhill Municipal Orchestra with Tatiana Makushina (soprano).
Abroad.
Radio Paris, 9, Berlioz's "Requiem."

MONDAY, AUGUST 3rd.

Nat., 3 and 4.20, Relays from Brooklands. 4.55, Olympic Games Relay. 5.5, Oval Relay. 8.30, "Coster Carnival."
Reg., 8, "Thunder over the Pennines," a Debate between Lancashire and Yorkshire.
Abroad.
Radio-Paris, 8.45, Symphony Concert from the Casino, Vichy.

TUESDAY, AUGUST 4th

Nat., 5.25, Olympic Games Relay, 8, "The Breadwinner" (Somerset Maugham). 9.50, Music of Roger Quilter and Percy Grainger.
Reg. "Join in the Measure," Vocal and Instrumental Dance Music. 9, "How's That?"
Abroad.
Kalundborg, 10.10, Dances Old and New by the Radio Orchestra.

WEDNESDAY, AUGUST 5th.

Nat., Jewish Male Voice Choir. 8.30, "The Fol de Rols." 9.50, From Beachy Head Lighthouse.
Reg., 8, The Proms—A Discussion. 8.30, "The Breadwinner."
Abroad.
Deutschlandsender, 8.10, Bach, Beethoven and Brahms programme.

THURSDAY, AUGUST 6th.

Nat., 4.10, Olympic Games Relay. ¶B.B.C. Dance Orchestra. 8.45, Empire Dental Meeting—talk. 9, Salzburg Relay. ¶Music of Jack Strachey. 10.45, Recital, Walter Widdop.
Reg., From Salisbury Cathedral—Organ Recital by Sir Walter G. Alcock. 8.45, "La Vie Parisienne."
Abroad.
Bordeaux-Lafayette, 8.30, Symphony Concert.

The Home Laboratory

III.—EQUIPMENT

By M. G. SCROGGIE, B.Sc., A.M.I.E.E.

VALUABLE advice to would-be experimenters on the choice of measuring instruments : where it pays to be extravagant, and also where economy may justifiably be exercised.

CHIEF among the difficulties—already mentioned in these articles—in giving advice as to the equipment of the home laboratory is the decisive but unknown factor of finance—unknown to the writer; perhaps painfully known to the reader. A single pair of shoes cannot be made to fit everybody comfortably. So when I advise the experimenter to buy an expensive instrument as a nucleus for his apparatus I do not intend to ignore the many enthusiasts who at the moment are unable to find the price of even a cheap meter. My present laboratory, valued at over £1,000, started on materials scrounged from the house, surplus junk from other experimenters, bargains at local salerooms, etc., and the first five-shilling voltmeter was a priceless possession.

However, as this series is not for the immediate guidance of the *very* young, I would repeat that anybody who intends to build up a useful set of equipment, whether purely as a hobby or professionally, would do well to lay out a substantial proportion of the available funds on a really good meter. Specialised radio instruments, such as signal generators, distortion bridges, and HF resistance apparatus, of which there is now such a bewildering choice, are constantly changing in design and tend to become obsolete fairly rapidly. But although it cannot be denied that great improvements have been made in volt and current meters during the last five or ten years, good instruments ten or thirty years old are still (assuming fair treatment) valuable possessions.

In any case it is unlikely that the recent improvements in form, adaptability, and cheapness will continue to be introduced at the same rate. After all, good workmanship now as ever costs money, and in the ordinary way a high-grade meter by a famous firm always commands a good price. In the *ordinary* way; but one sometimes does pick up exceptional bargains.

Some of the advertisers in *The Wireless World* specialise in Government disposal and similar lines which offer scope for the bargain hunter. As these do not generally carry any guarantee it is obviously advisable to be able to check them against a standard; and, of course, such buying calls for some discrimination if one is seeking a primary standard. Unless funds are very short indeed it is better to try those firms—also advertisers from time to time—who deal in second-hand instruments that have been reconditioned and if necessary recalibrated; and that are fully guaranteed. Sometimes the original makers can supply second-hand instruments that are practically equivalent to new except that perhaps they are not of the latest pattern. But of course one cannot in this way expect to save a very large proportion of the cost of a new instrument.

Multi-range Meters

Recent improvements do not concern accuracy—in any given price class—so much as convenience. There is now a very wide choice of multi-range meters, covering AC as well as DC readings (voltage and current), and often some resistance ranges, too. Some means of covering all these measurements is almost indispensable to the experimenter or to anybody who has occasion to test radio apparatus. Whether it is the best policy to make such an instrument the primary standard of a laboratory may well be questioned, however. It is in constant demand and comes in for any rough usage that is going. Moreover, extreme accuracy is not usually needed for this sort of work. If a really high-class instrument can be afforded at all, there is a lot to be said for getting a comparatively cheap but serviceable multi-range test set such as the Avominor, and then doing oneself proud with a Cambridge Versatile Galvanometer for the experimental work. This consists of a sensitive but (for its delicate workmanship) surprisingly robust microammeter with a good long scale that can be read to a hairsbreadth. To it may be added an almost unlimited variety of shunts, multipliers, thermo-junctions, etc., and for resistance measurement an accessory designed by the writer; covering altogether an immense range of work. But the advantage is that while the galvanometer is a direct-reading microammeter that is very valuable by itself—notably as the indicating part of a valve voltmeter—its applications can be gradually extended in those directions where the need is greatest. This is more economical than a completely self-contained do-everything meter of similar

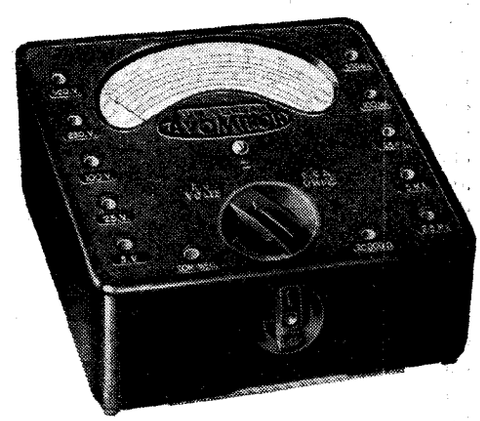

The Avominor, a compact and inexpensive multi-range measuring instrument.

quality, in which some part of the high cost would probably represent unnecessary luxury.

A multi-range meter cannot be everywhere at once, so to supplement the meter department it is extremely useful to have a few miscellaneous instruments. They need not be extremely accurate, and therefore one has a good chance of picking them up on the second-hand or even the junk market. The most generally useful ranges are 5 and 25 milliamps and one or two ranges of volts. Rough checks of valve feed currents and supply voltages save much confusion in experimental work. The calibration can be checked and adjusted by the good meter, and is not so very important; but it is *most* important to see that the movement is perfectly free when held in various positions, and does not stick or show different readings according to whether the current is going up or

The Home Laboratory—

down. This, or a pointer that swings like a nervous golfer before showing a reading, is extremely exasperating. Another important thing to look into is the power absorbed by the meter—voltage dropped by a milliammeter or current taken by a voltmeter. Some of the "bargains" may fail in this respect.

Standards of Accuracy

By the way, some meters are marked "B.S.1" or "British Standard 1st Grade" or the equivalent. This sign does not mean that it is the highest possible grade of instrument, for there are better grades such as "Sub-standard" (which does not sound nearly so impressive!); it does mean that the instrument satisfies a certain standard of accuracy, which is good enough for any but exceptionally precise work.

The principle that one should look ahead and get something perhaps rather more expensive than seems justified at the time applies also to standards of resistance, inductance, and capacity, if one is likely to be doing work involving accurate measurement of these qualities. But if there is no intention of going in for this sort of work, or if the expense cannot in any way be met, it is possible to get or make approximate standards quite cheaply, as will be explained later.

Continuing to consider equipment that is bought rather than made, there is less reason than hitherto for making one's own oscillators, either of the signal generator or audio types, for there is now a good choice at remarkably low prices. Years ago one of the first requirements of any experimenter was a wavemeter, consisting generally of a valve oscillator—or sometimes just a buzzer—calibrated in wavelengths. No consideration was given to the strength of the radiation from it, so long as it was capable of being picked up by the receiver. Now, with sensitive receivers, one wants a very weak test signal for final lining-up of circuits; and also a much stronger one for testing a single stage or

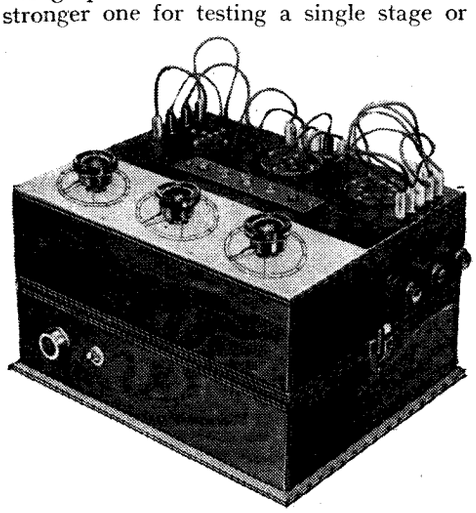

The "Wireless World" valve-testing bridge, for rapid checking of valve "goodness."

for "finding the place" with an untrimmed receiver. The earlier crude method, of pushing the oscillator farther away or turning it around, is hardly good enough. So a modern oscillator is totally screened, except for one outlet which can be controlled. The difference between a cheap test oscillator and a standard signal generator costing hundreds of pounds is chiefly in the completeness of screening and control. Even many of the cheaper varieties now give some idea of the actual strength of the signal in microvolts at different settings of the control. Modulation is invariably provided, and it is very useful if provision is made for optional modulation by an external gramophone pick-up or variable audio oscillator. And means for switching off the modulation altogether ought certainly to be insisted upon. Control of the depth of modulation is a very useful, but unfortunately rare accomplishment.

Another feature that has a considerable influence on the complexity and price is the range of wavelengths covered. An oscillator covering everything from the amateur 5-metre band to 3,000 metres for IF (60,000 to 100 kc/s) would be delightful, but the number of coils required would be very large. Harmonics provide some

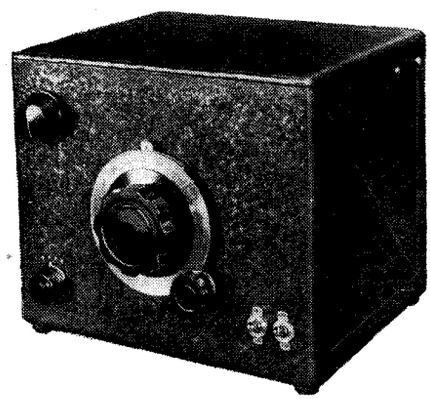

A simple modulated test oscillator, described in "The Wireless World" of May 10th, 1935.

sort of a substitute for the lower wavebands, which are the most difficult to arrange in a self-contained all-wave oscillator. For wavelength measuring purposes the short-wave experimenter can hardly do without an absorption wavemeter, which is quite easy to make.

In fact, the suggestion that the signal oscillator might be bought is not to be taken to mean that there is any difficulty in designing and constructing at least the simpler sorts and thereby making sure of meeting one's own pet requirements. One of the earlier difficulties—calibration—is now absent, for broadcasting stations hold their advertised wavelengths with such extreme precision that this is by far the most accurate standard available to the laboratory.

There is, of course, no limit to the equipment that can be bought, granted the wherewithal; but as it is safe to assume some degree of financial stringency my recommendations are confined to meters (with the just possible exception of home-made accessories such as multi-ranging devices—shunts and series resistors), other laboratory standards (if accurate ones are essential and funds permit), and, very optionally, a signal generator (if an elaborate one is needed and is too troublesome to make). I am inclined to say that it would be better to make do with a home-made oscillator if

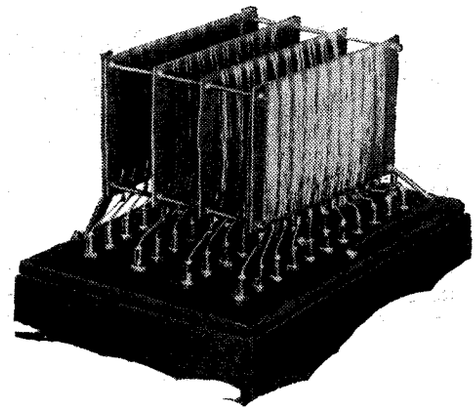

Units, tens, hundreds and thousands of ohms; a decade resistance box with non-inductive windings.

it enabled one to afford the £6 or so for a cathode ray tube, for of all laboratory apparatus this is the most fascinating and informative.

Before going on to consider the details of equipment that can be made, it will be a good thing to review the items most likely to be needed. The object of making things is not exclusively to save money; it is in itself interesting and instructive work, and the advantage of being able to suit one's individual needs exactly, is compensation for the limitations of amateur workmanship. As a matter of fact there are comparatively few items that it is at all needful to make up into permanent form—most of the work can be more efficiently, economically, and adaptably carried out with temporary "bread-board" lash-ups.

The Essential Valve Voltmeter

This may be true even of that most essential of instruments—the valve voltmeter. There are all sorts of valve voltmeters, each with limited advantages, and instead of making up a beautiful permanent instrument and having to use it for everything, it may be more sensible to rig up the most useful circuit for each job.

A valve voltmeter is sometimes used as an output meter for receiver tests—ganging, etc.—but it is unnecessarily delicate for the work, and is wasteful of battery power. It is better to use a metal rectifier type of AC voltmeter, which is probably part of the multi-range test set, or can easily be made by using an instrument rectifier in conjunction with a DC voltmeter.

For audio-frequency characteristic tests one needs an audio oscillator, for which a fair substitute is a gramophone pick-up and standard frequency records.

The most generally useful device, in my opinion, is one to which a special article will next be devoted—a dynatron oscillator. It forms the basis for a great variety of tests and measurements—HF resistance, inductance, capacity, matching of tuning

The Home Laboratory—

components, and many other uses that constantly crop up in experimental work.

Then there is the signal oscillator, if not bought. And an absorption wavemeter for short-wave work. For measurement of resistance, inductance, and capacity, the bridge is the accepted system for low frequencies at least; and an enormous variety of methods based on this principle have been devised. Although it seems almost heresy to suggest a laboratory without at least one bridge, it is really not an indispensable tool for the radio amateur; though very nice to have it, the tests most often required can usually be carried out with one or other of the instruments already listed. There is the multi-range test set for DC resistance (either read directly or worked out by Ohm's Law); HF measurements can be made with the dynatron oscillator; and sundry LF and HF measurements with a valve voltmeter. But there is no doubt that a bridge is more convenient for many purposes, and constructional details of one for measuring capacity and resistance were given in *The Wireless World* of December 20th, 1935.

Mindful of the principle of never taking anything for granted, one must consider how to check valves. The construction of a valve bridge for measuring the most significant quantity—mutual conductance—was fully described in the issue of February 21st last.

Miscellaneous items that are likely to be wanted sooner or later are a standard amplifier, a "listening" oscillator, a decibel attenuator or potential divider,

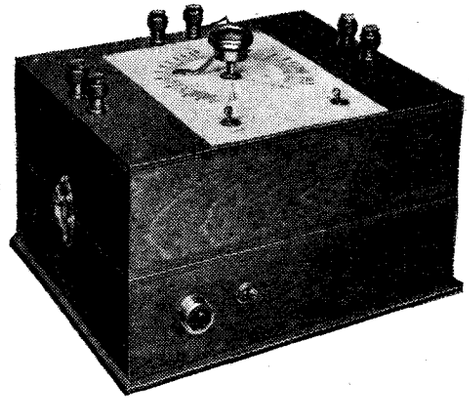

For measuring resistances and condensers: a valve-excited bridge of which constructional details were given.

comparison switches, valve "break-in" adapters, sundry standard resistances, inductances, and capacities, and selector switches for testing various quantities in experimental circuits.

In the next article some of the home-made appliances will be described in greater detail.

Distant Reception Notes

RECENTLY I have been discussing the question of the reception of British stations abroad with a good many friends who either live in the southern parts of the continent or have been on Mediterranean cruises. Almost without exception they tell me that though our stations used to be well and clearly received it is now very difficult to hear much of the home programmes on the medium and the long waves. If you care to examine the Lucerne list of stations you will see that Droitwich shares the 1,500-metre wavelength with Irkutsk and is separated by only 9 kilocycles from the 60-kilowatt Deutschlandsender. In southern parts, therefore, its transmissions are liable to be affected by low-frequency heterodynes when Irkutsk deviates from its wavelengths and by pronounced sideband splutter from the German station. The 70-kilowatt North Regional on 449.1 metres is sandwiched between two 100-kilowatt stations, Cologne and Söttens. The Scottish Regional, with only 50 kilowatts, is overshadowed by Toulouse P.T.T., and the London Regional, with the same power output, is not infrequently heterodyned. Bordeaux and Genoa may both be responsible for sideband splutter with Northern Ireland, and Midland is apt to suffer from heterodyne due to the wavelength wanderings of some of its neighbours. Scottish National comes in between the powerful Rennes and Bari No. 1, whilst London, North and West Nationals, with their synchronised working on 261.1 metres, are quite useless at a distance.

It seems therefore that our rather feeble transmitters—Northern Ireland is the only one rated at 100 kilowatts on the medium waveband—are being overweighted by their Continental rivals and that the British programmes are getting through very poorly, if they get through at all, to the south of Europe. This is a great pity, for amidst the flood of propaganda from certain Continental countries our own stations, in the days when they could make themselves heard, did us a vast amount of good and increased our prestige by the impartiality of their talks and their news bulletins. We urgently require more powerful transmitters for internal as well as for external service, and they cannot be put in hand too soon.

Many Experimental Transmissions

At the moment we seem to be more or less at a standstill as regards the coming into operation of new high-power European stations. Many are being built, and the number which have almost reached the stage of experimental transmission is considerable. Hence, though I cannot now tell you to try for this new station or that, there will be a big crop of possible quarries for the long-distance man within the next few months. But, before Christmas in fact, we should have something like a dozen reliable fresh transmissions to add to our logs. I am rather afraid though that sideband splash is going to be a very big problem. The trouble is that no degree of selectivity can get rid of that, as N.P.L. investigations have shown.

China possesses already several broadcasting stations of moderate power and she is feeling the need of a central high-power station capable of serving her own vast area with its 400,000,000 inhabitants, roughly, one-fifth of the whole population of the world. At present opinion is divided between a gigantic long-wave station, easily received in every part of the country, and a high-power short-wave transmitter able to cover the whole of China and to be heard in most other parts of the world. The difficulty is that any short-wave station has a largish skip area and may therefore be inaudible over a fairly wide local radius, though it can be received almost to the ends of the earth. On the other hand, a big long-wave station can be sure of reaching millions of "local" listeners though its outside range may be limited. On the whole, the Chinese Government is likely to plump for a long-wave station in the 500-kilowatt class, and if it does so reception in this country should be possible under favourable "freak" conditions.

D. EXER.

IGNITION INTERFERENCE

An Alternative to Suppressor Resistances

WHEN installing a wireless set in a motor car it is necessary to tackle the problem of "static" interference from the ignition system. One plan is to screen all the parts liable to radiate, though this is somewhat expensive if done thoroughly. Another is to insert resistances in the leads between each sparking plug and the distributor in order to cut down the back-surge of HF current after each discharge.

Opinion is somewhat divided as to whether the use of such suppressors is detrimental to the efficiency of the spark or not. In most cases it will make no difference, since there is usually an ample margin of "juice" in hand. But at the same time a high resistance must inevitably absorb some of the sparking power available.

As an alternative, the Marconi Co. propose to use high-frequency rectifiers of the copper-oxide or similar type. These are connected in the ignition leads in the proper sense to allow the initial sparking current to pass, whilst blocking out or rectifying the reverse surges of high-frequency current which are the source of the trouble.

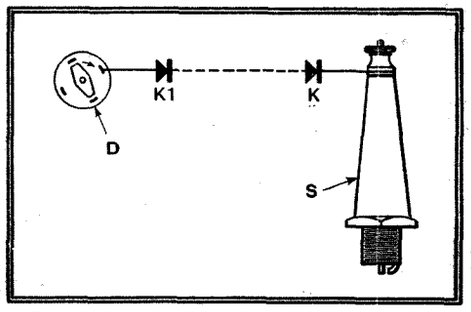

Illustrating the use of metal rectifiers in place of suppressor resistances

As shown in the Figure (patent No. 444201) one rectifier K is placed quite close to the sparking-plug S, whilst a second rectifier K1 is inserted equally close to the distributor D. This is said to give substantial relief without screening, though naturally the use of screening, in addition, will be all to the good. The effective DC resistance of the rectifiers is less than that of the normal suppressor required to give equal relief. When starting the engine, the rectifiers K, K1 may be automatically short-circuited.

Broadcast Brevities

NEWS FROM PORTLAND PLACE

Bothersome Fade-outs

WIMBLEDON tennis commentaries have been a thorn in the B.B.C.'s flesh this year. On one or two occasions the commentary has been cut off at a thrilling moment, in order that the next programme should begin on time. Here is the explanation. "Radio Communications" was a programme involving the rental of the radio telephone service; which meant that the beam system was to be available for a specified time. If the B.B.C. had not been ready at that time, the programme would have been a complete fiasco! a tennis result could be given later; the "Radio Communications" programme could not.

"All Stations Over to London"

The fading-out of Wimbledon for a news bulletin also involved something more than mere programme merit. All B.B.C. stations are instructed to end their previous programmes on time, so as to be ready to take news bulletins. Stations, therefore, which were not taking the Wimbledon commentary would have been kept waiting, to say nothing of the millions of listeners on sea and land who are not interested in tennis, if the news bulletin had been delayed.

Who is Stainless Stephen?

DURING the House of Commons debate on the future of the broadcasting service, Mr. H. B. Lees-Smith, a former Postmaster - General, said: "You cannot have a Stainless Stephen on Civil Service conditions. I am sorry to notice that the Postmaster-General appears to be entirely ignorant of the gentleman."

A Stainless Reputation

Now, Major Tryon did not enquire, with an air of innocent surprise, "Who is Stainless Stephen?" He did not even scoff at the idea of that comedian being raised to the dignity of mention in the House. He, in fact, made no sort of remark, cutting or otherwise, about this ex-schoolmaster who borrowed his professional name from a product of his home town. Lest, therefore, it should go down in the history of broadcasting that there was a P.M.G. who knew not one of its greatest ornaments, let it be placed on record that Major Tryon was not so ignorant as his accusers declare. He knows the work of the great quote S dot S dot end quote so well that he emerges with a stainless reputation.

"Backstage" at Daventry

WHEN Mr. L. W. Hayes, of the B.B.C., does a radio tour of the Empire station at Daventry shortly, his description of the station will be broadcast from the Empire transmitters there, but it will first travel up to London and back again to Daventry!

Microphones are to be installed throughout the Daventry station, but the programme will have to go up to Broadcasting House by land-line, for controlling, and also for records to be made, before it goes back to Daventry for transmission. The actual transmission will be on August 11th, but the electrical recording will again be broadcast to the Empire on August 12th, 14th, 16th, 18th, and 21st at various times and on various wavelengths. It will also be given from Midland Regional on August 12th.

Mr. Hayes will give a description of the scene of the station and of its internal activities. There will also be a commentary by a rigger perched on the top of one of the old 5XX masts, 500ft. high.

Another Broadcasting House

WORK on the new Broadcasting House in Glasgow will start in the autumn. Housed in Queen Margaret College, this Broadcasting House will be worthy of the second largest city in the United Kingdom. It promises to be not only the most attractive to look at, but also to work in, of all B.B.C. centres, and already B.B.C. officials in other towns are canvassing the possibility of a transfer.

Eight Studios in a Garden

The building will be situated in its own garden, and will present a fine example of Palladian Renaissance architecture. There will be eight studios, the largest being 80ft. by 57ft. in area and 40ft. in height. The architect is Mr. James Miller, working in association with Mr. M. T. Tudsbery, the B.B.C.'s civil engineer.

Radiolympia

IT is by no means certain that the television transmitters at Alexandra Palace will be ready in time for experimental demonstrations to be relayed to Radiolympia at the end of August. On the other hand, it can be taken as definite that several variety performances in the theatre at this year's exhibition will be broadcast by the B.B.C. The dates on which listeners may expect to hear parts of the programmes are August 27th and 31st and September 5th, in addition, of course, to the Children's Hour performances on August 31st and September 1st.

The Old Gang

Among the artists whose turns will be heard are Stainless Stephen (it is clear that his name cannot be kept out of this week's notes), Sam Mayo, Tollefsen, Clapham and Dwyer, Harry Hemsley, Leonard Henry, the Western Brothers, Les Allen and his Canadian Bachelors, and the Carlyle Cousins. It sounds almost like a Music Hall broadcast on a Saturday night.

Personal Expenses

ONE of the most efficient and carefully supervised departments of the B.B.C., about whose work little is known outside Broadcasting House, is the Accounts Department, where the personal expenses of members of the staff (as distinct from salaries and wages) are dealt with. This department handles accounts running into tens of thousands sterling a year. Only five years ago, before the removal from Savoy Hill, some five hundred claims were sent in by members of the staff in the course of a year on account of expenses incurred. Now, more than a thousand accounts have to be settled each *month*.

How the Money Goes

This increase of 2,400 per cent. per annum is due to the growth in personnel and the concurrent increase in general activities. Not only do producers incur expense in entertaining broadcasting artists and others; there is also a good deal of travelling about the country to be undertaken in search of talent. Transfers from one broadcasting station to another, involving the removal of officials' homes and families, are a considerable item; hospitality extended to distinguished visitors from abroad also swallows up a lot of money.

A "D.G." Audit

Secret investigations, involving a close scrutiny of every penny spent under the head of personal expenses, are carried out frequently, and it is rumoured that the members of the staff authorised to incur expenditure in the service of the Corporation are by no means extravagant; but so large a sum is now involved each year that Sir John Reith has decided to conduct a personal enquiry starting from the top to make certain that not one penny piece of listeners' money is being spent unprofitably.

Feature Programmes

CONTINENTS, even Time itself, will be spanned in feature programmes during the late Summer and Autumn. The historical features, "Erasmus" and "Sedgmoor," are to be followed on August 15th by "Thucydides' Sicilian Expedition," which, although dealing with a period as remote as 415 B.C., discloses many extraordinary parallels with present-day affairs. Two men of great but widely varying talent who will have special programmes devoted to their memory are Bret Harte, famous American writer, and Ferdinand de Lesseps, whose name is indissolubly associated with the Suez Canal. The Bounty Mutineers will be featured on September 2nd in a programme prepared by Owen Rutter, the novelist, and Cyril Nash, a favourite of broadcast fans.

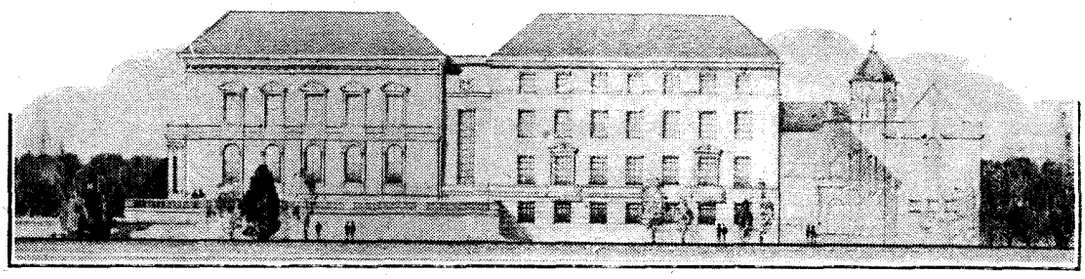

GLASGOW'S BROADCASTING HOUSE which will contain the largest suite of studios in the provinces. This drawing gives some idea of the style of architecture which is to be employed.

RANDOM RADIATIONS

By "DIALLIST"

What About the Short Waves ?

IT is rather sad to see that no special mention of short-wave reception is made in the report of the Institution of Electrical Engineers' Committee on interference. There is a brief paragraph dealing with motor car ignition systems and television, and from this I deduce, rightly or wrongly, that the Committee intend that the Electricity Commissioners, when given the powers that it recommends should deal with interference only in so far as it affects reception of the listener's local stations. That is, I believe, the policy of the General Post Office people at the present time, but they have of course been labouring under the very severe handicap of having nothing save moral suasion to rely upon when dealing with offenders. In these days when almost every listener has a wireless set which is capable of bringing in foreign stations and likes to use it for that purpose every now and then, it would be a great pity if the official attitude were that the local stations, whether for sound broadcasting or for television, are the only ones from which he can reasonably expect interference-free reception.

We Want More!

We want a good deal more than this, especially as with the arrival of the three-band or four-band set in popular form, the man in the street is at last beginning to take a real interest in short-wave reception and to discover for himself how interesting and how thrilling it can be. All short-wave enthusiasts who live anywhere near a road on which there is much motor traffic—and you have to be buried pretty far into the depths of the country nowadays to find a road where there isn't—know how poisonous interference from car ignition systems can be. It is perfectly true that *if* he can rig up an efficient transmission line aerial 30 or 40 feet in height the listener may get rid of a good deal of this interference; but aerials of this kind are rather costly, and not everyone can achieve a height of 30 feet or more for the roof portion. Again, the screening of many sets, though it is effective enough for the prevention of internal cross-couplings, it is not sufficiently good to do away altogether with direct pick-up of interference. In such cases no anti-interference aerial can work an entire cure. Unless we have legislation prohibiting radiation of interference above a certain level on any wavelength used for broadcasting, and unless the authorities rid themselves of the local-station complex, I am sadly afraid that the Anti-Interference Act will be so feeble a thing when it does become law that it will be of no great use to listeners at large.

Can't We Make Our Own ?

ONE item in the import and export figures for June makes one do a bit of thinking. In that particular month we imported £67,433 worth of component parts for wireless receiving sets, exported and re-exported parts being worth less than half as much. It seems rather hard to understand why we should need to buy components abroad to such an extent considering the number and size of our own factories and the high standard of their products. And components are not the only things that we are importing in surprisingly large quantities. In June well over 100,000 foreign valves came into this country and no fewer than 6,175 complete receiving sets. There is also an item of more than £4,000 for radiograms bought abroad. These things are certainly not too good. It would not matter if we imported a certain amount of wireless gear so long as we exported a great deal more. As it is our manufacturers hardly seem to realise the possibilities of the big markets in the East and in many parts of the Empire.

Not Good Policy

One of our troubles is, I believe, that we will not go out of our way the least little bit to make the kind of things that are needed in other countries. In the East, for instance, a long-wave range is quite unnecessary, but it is essential to have a set that is really sensitive on both the medium and the short waves. Some firms are turning out models specially suitable for such conditions, but in other cases one finds that if any attempt is made at all to sell British sets nothing but the standard home model is offered. Another point of the utmost importance is that sets intended for use in many distant countries must be specially designed to withstand dust, damp, and enormous variations of temperature. In some parts of India, for instance, hard frosts are experienced at night during the cold weather, whilst in the hot weather the day temperature may be in the neighbourhood of 120 degrees in the shade. We can undoubtedly make the sets if we only will, and the market is there for them if we do make them. One only hopes that we make up our minds to do so before it is too late.

How America Does It

I hold no brief for American sets, but we can't help admiring the way in which they set about tackling foreign markets. There's no long-wave broadcasting in America, but manufacturers who have an eye on Europe are ready and willing to turn out receiving sets with a long-wave range. In America stations are arranged with a 10-kilocycle separation, so that a tuning scale marked off into tens of kilocycles is the usual thing, and a very convenient arrangement it is. But though Americans can think in kilocycles, the man in the street in this country cannot do so with the same ease, since our Lucerne Plan has a 9-kilocycle basis. To meet his requirements the American manufacturer is quite willing to provide his set with a wavelength dial or with one showing the names of stations if he thinks that there is a real demand for that kind of thing. In other words, the American manufacturer gets export business because he will adapt his set to meet local requirements whilst we are not doing half the business that we should because our attitude is too much inclined to be "Here is a set that sells well in the Mother Country. We can't alter it to suit your particular needs. You can either take it or leave it."

Letters to the Editor

The Editor does not hold himself responsible for the opinions of his correspondents

Biasing the Output Stage

I WAS very interested in Mr. T. H. Bridgewater's article on biasing the output stage. If my own personal experience is worth anything, the employment of automatic bias would seem to be impracticable in the case of valves of the 25-watt class if attenuation at low frequencies is to be avoided. Since it is necessary to use very large capacity condensers and the cost of paper condensers of 50 to 100 mfd. is prohibitive, the initial leakage that makes the electrolytic type so serviceable in restricting no-load voltage surges acts as a temporary partial short-circuit of the bias resistance when the set is first switched on and thus endangers the life of the output valve. It is for this reason that I prefer to bias valves of above 12 watts from a separate source.

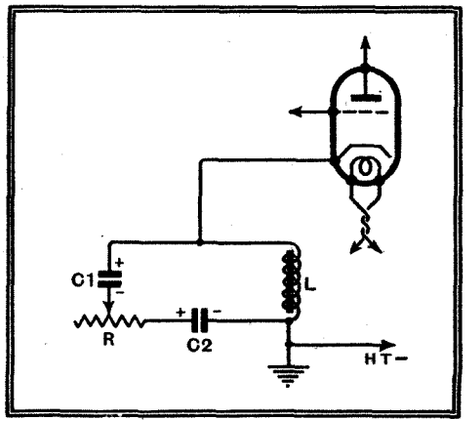

An effective method of controlling the bass.

While on this subject of auto-biasing, I should like to make the suggestion to those who use a non-inductive biasing resistance in the cathode circuit of the first low-frequency valve (following the diode detector), that they substitute a 35-henry iron cored choke of approximately 850 ohms DC resistance, shunted by the usual 50-mfd. electrolytic condenser. This produces a very useful rising characteristic at the lower end of the spectrum, and the effect on quality is generally beneficial. By connecting another smaller capacity condenser in series with the electrolytic through a variable resistance it is possible to control the bass quite effectually. The values of C1 and R may be 4-mfd. and 0.25 megohm respectively.

NOEL BONAVIA-HUNT.

London, N.W.6.

Interference: the "Russell Effect"

IN view of the numerous forms of interference affecting radio reception, you will no doubt hear with mixed feelings that I have discovered a possible new form of interference, which I hope posterity will have the decency to refer to as "Russell Effect."

It was found when experimenting with 5-metre receivers that when an oscillating detector stage was switched on in order to provide a "signal" for a super-regenerative 5-metre receiver in the same room, the 5-metre receiver immediately became alive with short-wave signals from the 30-metre band. Obviously the local 56 Mc/s oscillations and the short-wave signals were simultaneously mixed and detected by the 5-metre receiver as in a normal superhet. Both the sum and the difference frequencies could be tuned in, and the effect was by no means critical, and has repeated itself at every attempt. On switching off the local oscillator the signals vanish, and by altering its frequency the signals are merely shifted to different positions in the receiver, as would be expected on a "superheterodyning" explanation.

It is, therefore, to be expected that when powerful ultra short-wave transmitters are in operation, ghost signals produced in this way may prove a serious form of interference, unless careful filtering of the receiver input is employed. It is also possible that the reports of distant reception of "harmonics" on ultra-short bands of normal short-wave stations may be due to a form of this effect.

No doubt other experimenters who are sufficiently interested to try will be able to reproduce this effect.

Norwich. O. J. RUSSELL.

In Next Week's Issue

The ALL-WAVE SUPER SEVEN

A Sensitive Receiver Covering Long, Medium and Short Wavelengths

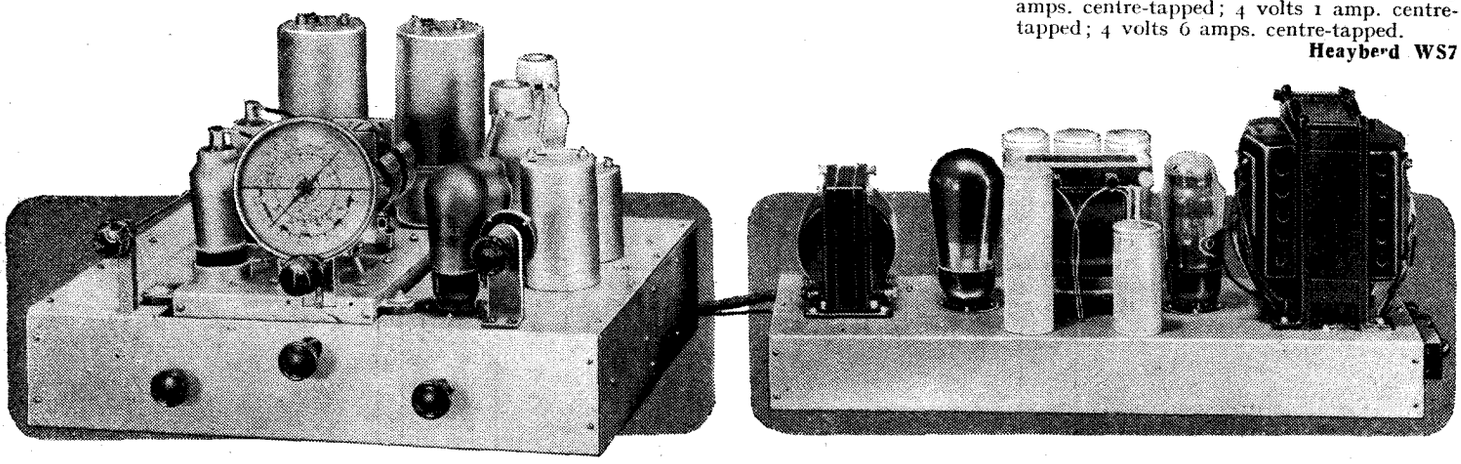

INTEREST in short-wave reception is rapidly increasing even among those who are less interested in the technical side of wireless than in the reception of broadcasting. Consequently there are many to whom the inclusion of short-wave ranges in a receiver which also covers the medium and long wavebands is of particular appeal.

The All-wave Super Seven is designed for AC operation, and covers the short-wave band of 16-50 metres in addition to the normal broadcasting wavelengths, so that the majority of the world's broadcast transmitters lie within its tuning range. A signal-frequency amplifier is used, and operates on all wavelengths, while two tuned circuits reduce second-channel interference to a minimum. There are two IF stages with six tuned circuits specially arranged to give good variable selectivity characteristics, and a diode detector provides distortionless rectification and AVC. One LF valve is employed and feeds the output triode through a high quality LF transformer.

LIST OF PARTS

RECEIVER.

1 Tuning unit and dial — **Rothermel "Radio-Heart"**
2 Variable selectivity IF transformers, with coupling unit — **Sound Sales IF465**
1 IF transformer — **Bulgin C50**
1 IF coupling coil — **Bulgin C43**
Condensers:
2 0.05 mfd., tubular — **T.C.C. 250**
8 0.1 mfd., tubular — **T.C.C. 250**
3 0.0001 mfd., mica — **T.C.C. "M"**
1 0.001 mfd., mica — **T.C.C. "M"**
1 0.01 mfd., mica — **T.C.C. "M"**
1 25 mfds. 25 volts, electrolytic — **T.C.C. "FT"**
Resistances:
1 100 ohms ½ watt — **Erie**
2 150 ohms ½ watt — **Erie**
5 500 ohms ½ watt — **Erie**
1 1,000 ohms ½ watt — **Erie**
2 10,000 ohms ½ watt — **Erie**
1 25,000 ohms ½ watt — **Erie**
1 100,000 ohms ½ watt — **Erie**
1 1 megohm ½ watt — **Erie**
1 2 megohms ½ watt — **Erie**
1 10,000 ohms 2 watts — **Erie**
1 7,500 ohms 4 watts — **Erie**
1 Volume control, tapered, 0.5 megohm — **Erie**
4 Resistance boards 5-way — **Bulgin C31**
1 Resistance board 10-way — **Bulgin C32**
2 Valve holders 7-pin (without terminals) — **Clix Chassis Mounting Standard Type V2**
1 Valve holder 5-pin (without terminals) — **Clix Chassis Mounting Standard Type V1**
1 Valve holder 5-pin (special with 7-pin fixing holes) — **Clix**
1 Switch, rotary, DPDT — **Bulgin S114**
1 Switch, rotary, SPST — **Bulgin S91**
1 5-way cable with twin 70/36 leads and 5-pin plug — **Goltone**
1 5-way connector — **Bryce**
5 Ebonite shrouded terminals A (2), E, PU (2) — **Belling-Lee "B"**
2 Screened connectors — **Bulgin P65**
1 Pair bevel gears, equal sizes, 1:1 ratio, ⅞in. dia. × 26 teeth — **Meccano Type 30**
1 Large knob ¼in. bore — **Bulgin K12**
5 Small knobs ¼in. bore — **Bulgin K14**
1 5/32in. brass shaft 12in. long — **Bulgin**
1 Reducing sleeve for 5/32in. shaft to ¼in. knob — **Bulgin**
1 Length screened sleeving — **Goltone**
Chassis — **Scientific Supply Stores**
Miscellaneous:—
2 supports for control shaft 2½ins. long × ⅜in. sq., drilled for 4 BA screws; 8 lengths systoflex; 2 ozs. No. 18 tinned copper wire; bracket for volume control, etc. Screws: 6 4BA 1in. r/hd., 32 6BA ¼in. r/hd., 8 6BA 1in. r/hd., all with nuts and washers.
Valves:—
2 VMP4G metallised, 1 D41 metallised, 1 MX40 metallised — **Osram or Marconi**
1 D4 metallised — **Ferranti**
1 VP4B metallised — **Mullard**

POWER UNIT.

1 Mains transformer with screened primary; primary, 200 to 250 volts, 50 c/s.; secondaries: 375-0-375 volts, 120 mA; 4 volts 2.5 amps. centre-tapped; 4 volts 1 amp. centre-tapped; 4 volts 6 amps. centre-tapped. — **Heayberd WS7**
1 Smoothing choke 10 henrys 130 ohms 100 mA — **Rich & Bundy E104M**
1 LF transformer 3.5:1 ratio — **Ferranti AF5**
Condensers:—
1 50 mfds. 50 volts, electrolytic — **T.C.C. 521**
1 4 mfds. 460 volts, electrolytic — **T.C.C. 802**
4 8 mfds. 460 volts, electrolytic — **T.C.C. 802**
Resistances:—
1 100 ohms ½ watt — **Erie**
1 10,000 ohms 1 watt — **Erie**
1 750 ohms 2 watts — **Erie**
1 1,500 ohms 20 watts — **Bulgin PR6**
4 Valve holders 5-pin — **Clix Chassis Mounting Standard Type V1**
1 5-pin plug for speaker connection — **Bulgin P3**
1 4-way connector — **Bryce Light Pattern**
1 Fused mains input connector with 1½ amp. fuses — **Belling-Lee 1114**
Chassis — **Scientific Supply Stores**
Miscellaneous:—
3 lengths systoflex; 1 oz. No. 18 tinned copper wire, etc. Screws: 26 6BA ¼in. r/hd., 8 6BA ½in. r/hd., 9 4BA ¾in. r/hd., all with nuts and washers.
Valves:—
1 MU14 — **Osram or Marconi**
1 LP4 — **Ferranti**

Certain components of other makes but of similar characteristics may be used as alternatives to those given in the above list.

Recent Inventions

The following abstracts are prepared, with the permission of the Controller of H.M. Stationery Office, from Specifications obtainable at the Patent Office, 25, Southampton Buildings, London, W.C.2, price 1/- each.

Brief descriptions of the more interesting radio devices and improvements issued as patents will be included in this section

VALVE GENERATORS

IT is known that there is a tendency for a back-coupled valve of the tetrode type to develop undesirable harmonics of the fundamental frequency. It is also known that if an impedance is inserted in the cathode lead, *i.e.*, between the cathode and the common point of the input and output circuits, it acts as a "degenerative" coupling.

According to the invention, in addition to the normal regenerative back-coupling, a "degenerative" link is provided in the form of a network which is resonant to the fundamental or working frequency. This leaves the normal output unaffected, but serves to prevent the production of harmonics.

Marconi's Wireless Telegraph Co., Ltd., and O. E. Keall. Application date 10th October, 1934. No. 445558.

o o o o

"AUTOMATIC" FINE TUNING

A SET which has been roughly tuned is brought automatically to the correct point of resonance by the aid of a derived current, the strength of which varies with the degree to which the circuits are originally out of tune. This derived current is used to correct the initial mistuning by changing the frequency of the local-oscillator valve until it beats at the correct IF frequency with the incoming signal.

E. K. Cole, Ltd., and G. Bradfield. Application date 5th October, 1934. No. 445350.

o o o o

CATHODE-RAY TUBES

INSTEAD of using a mosaic-cell electrode of the kind in which particles of photo-sensitive material are deposited upon a mica surface, the large end of a cathode-ray tube is provided with two closely adjacent cellular electrodes. The cells marked A act as anodes, whilst those marked B act as photoelectric cathodes. An insulated wire C enters each pair of cells.

The walls of the cells B are coated with photoelectric material, which emits electrons when a picture to be televised is focused on them. The liberated electrons are collected on the wires C, and are discharged by the electron stream from the "gun" part of the tube. The discharge is not direct, but is due to the production of X-rays as the electron stream sweeps past the base of the anode cells A. The X-rays serve to ionise the gas in each of the cells, and this in turn causes the charge on each of the wires C to leak instantaneously away.

A. B. Shorney. Application date November 30th, 1934. No. 445372.

o o o o

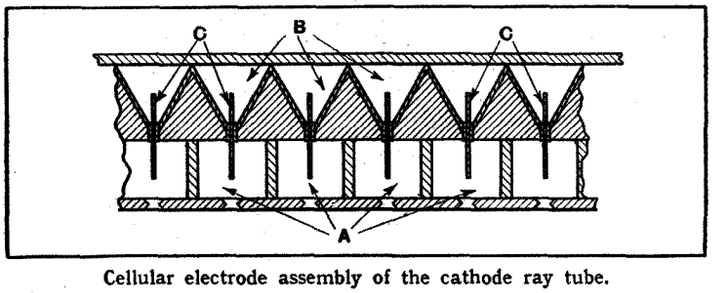

Cellular electrode assembly of the cathode ray tube.

MUTING CIRCUITS

RELATES to "quiet-tuning" circuits of the kind in which grid current is allowed to flow in the absence of a worth-while signal so as to reduce amplification, though normal operation is restored as soon as a signal over a certain "threshold" value comes in.

As shown in the figure the cathode of the valve V is positive to earth, being connected through a resistance R to a point P on the HT supply which is negative with respect to earth. The same cathode is connected to the grid of the intermediate-frequency valve V1 through resistances R1, R2. Grid current therefore flows which (*a*) reduces the amplification of the valve V1, and (*b*) disables the diode D of the valve V.

As soon as a worth-while signal is received, bias is supplied from the resistance R1 to the grid of the valve V so that the anode current of that valve is cut down. Its cathode thereupon becomes more negative, and the bias on the grid of the valve V1 is restored to its normal operating value.

E. S. V. Truefitt and R. E. Spencer. Application date September 5th, 1934. No. 445273.

o o o o

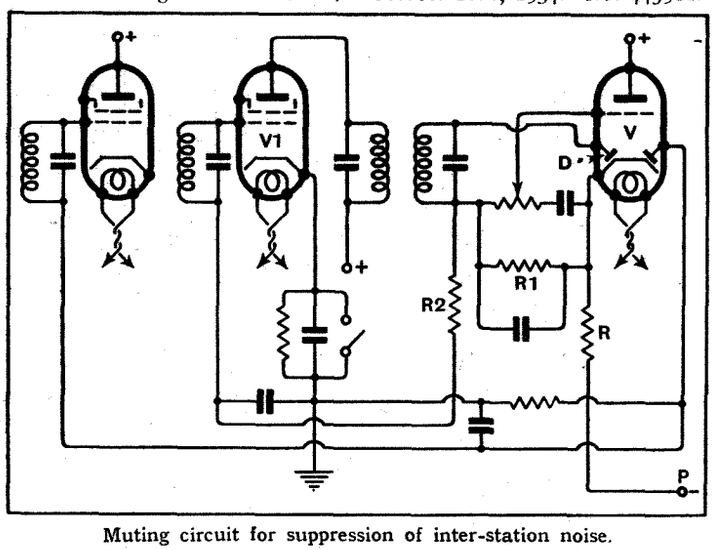

Muting circuit for suppression of inter-station noise.

"INTERLACED" TELEVISION

WHEN using this method, an odd number of lines must be scanned for every two pictures, so as to ensure the phase-displacement necessary to prevent the pair of pictures from overlapping on the screen. It is therefore necessary to generate a frame-synchronising signal when the last line of every alternate picture is only half scanned, and it is difficult, especially when the line and frame impulses are generated independently to maintain this fixed relation. The invention describes the use of a rotating shutter which is placed between the scanning-drum and the film to be televised. The shutter is fitted with slots or openings which are arranged to expose framing apertures, disposed alongside the film, so as to sweep a ray of light over a photo-electric cell, and so generate the frame synchronising impulses at the correct moment.

C. O. Browne. Application date October 18th, 1934. No. 445912.

MODULATING CIRCUITS

THE figure illustrates a method of automatic grid-bias regulation for the amplifier valve V of a small-powered transmitter. Oscillations from the preceding "driver" valve (not shown) are fed through a condenser C to the grid of the amplifier V, whilst signal voltage is applied from a microphone through a transformer T. High-frequency grid currents pass through a condenser C1, and low-frequency modulating currents through a condenser C2. The direct component of the grid current flows through a resistance R and supplements the grid-bias derived from a tapping on a resistance R1 in the anode circuit.

The combination of R and R1 gives certain advantages. If R1 were used alone, it would entail a corresponding increase in the total HT voltage required; whilst if R were used alone, it would result in a large change of aerial current at the beginning of each signal, so that reception would be "bumpy." The leak resistance R also limits the rectified grid-current, and so prevents overloading and saturation of the core of the transformer T. Similarly the resistance R1 serves to limit the "loss" current through the amplifier V, should the "driver" valve cease for any reason to function.

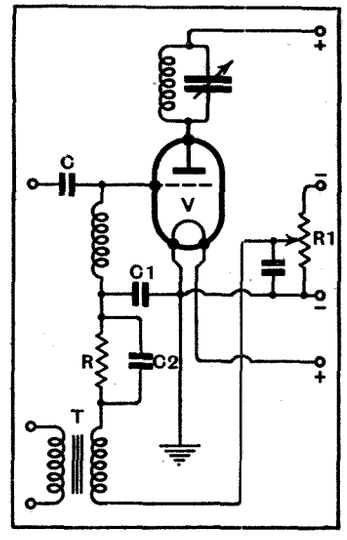

Method of self-biasing a low-power transmitter.

Marconi's Wireless Telegraph Co., Ltd., and E. H. Trump. Application date October 12th, 1934. No. 445582.

o o o o

AUTOMATIC TUNING

WHEN a valve is supplying energy to an output circuit, the ordinary grid-cathode capacity, due to the geometric size and arrangement of those two electrodes, is supplemented by a further capacity—the so-called Miller effect—which depends upon (a) the anode-grid capacity, (b) the nature of the load in the output circuit of the valve, and (c) the operating potentials. It follows that the effective capacity across the grid and cathode can be varied, within limits, by a suitable adjustment of any of the factors mentioned.

This fact is utilised to cause any initial mistuning of a wireless receiver to be automatically corrected by the action of the received signal. For instance, the signal is made to pass through two parallel circuits, one tuned a little above and the other a little below the correct operating frequency. Voltages are thus provided which raise or lower the bias applied to the control grid of a pentode valve, the latter is shunted across the circuit to be corrected, and the resulting change in the grid-cathode capacity of the pentode then acts, in effect, as a trimming condenser.

Marconi's Wireless Telegraph Co., Ltd., and N. M. Rust. Application date September 14th, 1934. No. 445543.